RESEARCH ARTICLE OPEN ACCESS

FABRICATION of AUTOMATIC WALL PAINTING ROBOT : the REVIEW

Dr. S. M. Mowade[1],Krunal Badwaik[2], Nikhil Madavi[3],Atul G. Thaware[4]

Final year students [2,3] Department of mechanical engineering, Smt. Radhikatai Pandav college of Engineering, Nagpur – 440009, India,
1. Prof. Head & Dean of mechanical engineering Department, Smt. Radhikatai Pandav college of Engineering, Umrer Road, Nagpur – 440009, India,
4. Asst. Prof. of mechanical engineering Department, Smt. Radhikatai Pandav college of Engineering, Nagpur – 440009, India,

Abstract:

The main plan of the project is to design, expand and realize Automatic Wall Painting Robot which applications Inside wall painting has shared little in research activities. The painting chemicals are found very much harmful to human painters which were causes the problem to eyes and respiratory system of human being. Also the nature of painting process that requires habitual work and hand rising makes it dull, time and effort irresistible. When construction workers and robots are correctly included in building tasks, the whole construction process can be improved run and reserves in human labour and timing are obtained as a outcome. In addition, it would offer the chance to reduce or remove human exposure to difficult and hazardous environments, which would solve most of the trouble connected the protection and it occurs they action many more time. The wall painting robot motivate the development of autonomous robotic painting system

I. INTRODUCTION

The wall painting automatic robot is not feature planned using tough mechanism. This robot is easy and movable. The robot is designed using control valve, electronic timer unit, battery, solenoid valve, spray gun use to paint the wall, an I.R sensor to detect distance between the wall and spray gun. 4 wheels for the movement of the robot with 2 gear motors attached to the wheels. This machine is portable and because of high speed and pressure capabilities they have it can run smoothly. Due to smart and simple control systems it can easily control noise, perform silent operation and no vibration is produced. It has longer life, flexibility and it is efficient and responsible, and the installation is simple and the maintenance is also easy. A robot is a rhythmic, taxing and harmful process which makes it an ideal case for automation. Painting had been programmed in automotive industry but not so far for the manufacture industries and also used for the commercial purpose.

A movable robot has a well built need which can be painted on the walls of residential buildings. This project is going to create and implement a remote opera wall painting robot, which helps to paint only on the wall and this robot is easy and portable. They have medium weight and expected performance, so less parts have been reduced due to the moved parts and therefore they get normal performance. The conditions that must be considered with this robot is that the mechanism is run by the electric motor and these components have encouraged the development of wall painting robotic setup.

II. LITERATURE REVIEW

[1] Another method of wall painting employs a similar mobile platform along with a belt and pulley mechanism and a spray gun. The spray gun is mounted on the belt which moves up and down based on the rotation of two pulleys mounted vertically on the platform. The spray gun - pulley arrangement provides the vertical movement and the movement of the platform provides the horizontal movement. The painting

arrangement is as shown below. This method is also appropriate to work only for indoor painting.

Based on the analysis of the results of the above two methods, it is observed that the spray painting method is more reliable and efficient compared to the roller painting mechanism, from a robotic automation standpoint. Hence, spray painting is used in this proposed method. There are costly (the price of compressor will be vary depending upon the size and specification of the compressor, but a basic unit will cost nearby $200). By using air-powered sprayers give you to spray a variety of fine finishes and are a better options for fine work. Airless sprayers are significantly cheaper than the air units are, but they make sprays with large, heavy paint particles so they are poor for laying down a actually smooth finish.

Fig 1. Experimental setup of Automated Wall Painting Robot

[2] Relay are used on all automobiles. Relays in composite size, applications and ratings are used as remote control switches. A typical car can have up to 20 relays or more. Connection a relay with microcontroller.

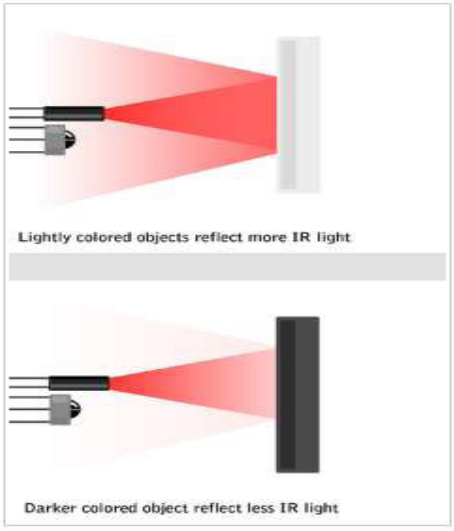

Fig. 2 Working On Object

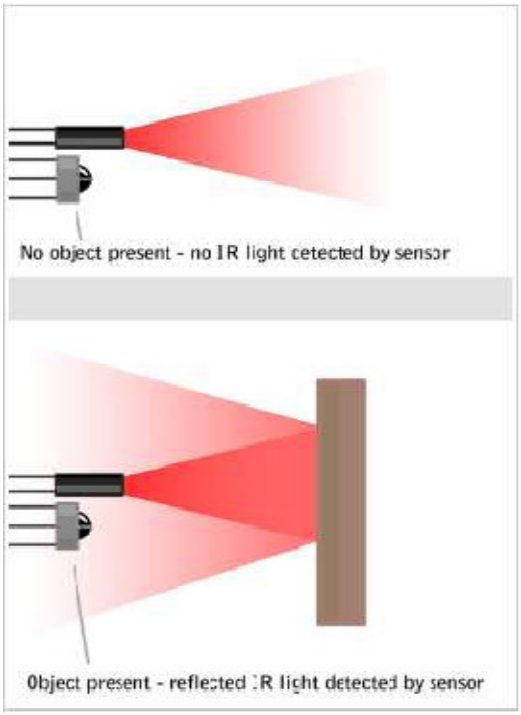

Fig.3 Working On Reflected Light

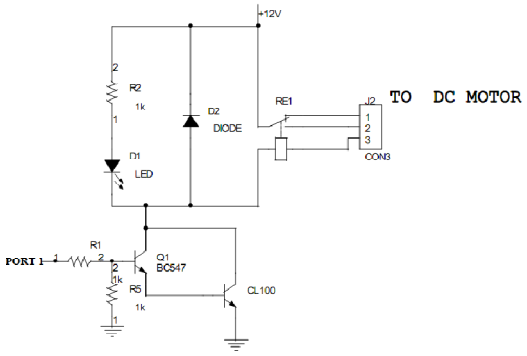

Fig.4 Relay connection

[3] The IR sensor is used for this project. IR is the best light source used in the sensor to identify a solid object with a robot. In this project, there is no need for programming, microcontroller and soldering. The IR sensor (IR receiver and IR emitter) is based on the IR emitter and IR receiver, the basic element of the IR sensor. If the IR emitter leaves continuous infrared, it will be supplied to the electricity. Instead, the IR receiver will be connected and will work as a voltage divider. The IR receiver is understood to be interpreted as a transistor, its light source receives the energy of the IR light.

1) IR Sensor Features:

- Input voltage: 5VDC
- Sensing Range: 15cm
- Output signal: analog voltage
- Emitting element: Infrared LED

2] IR transmitter and receiver: IC 555 timers and BD 140 are used to generate IR signal form. The 555 timer is connected to a static mode. The output of 555 timer is given to the transistor so that transistor switched on/off simultaneously according to the pulse from the 555 timer. IR LED Transistor T1 (BD 140) is connected. The IR transmitter is to transmit circuit infra-red rays.. The control circuit is used to off the solenoid valve at normal condition and conveyor motor is in ON condition. There are many materials available in the conveyor; Solenoid valve turned to the control signal so that the painting system is functioning. The following figure illustrates the principle of Solenoid valve operation. The conveyor motor is in a closed position in the operation at the same time.

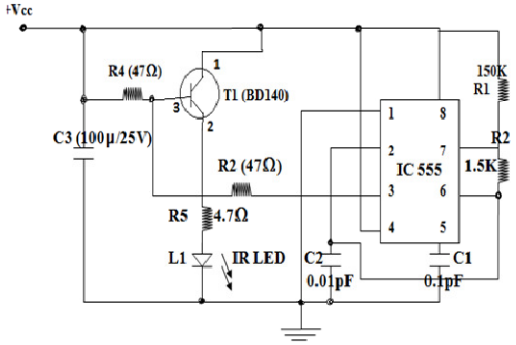

Fig.5 IR transmitter circuit

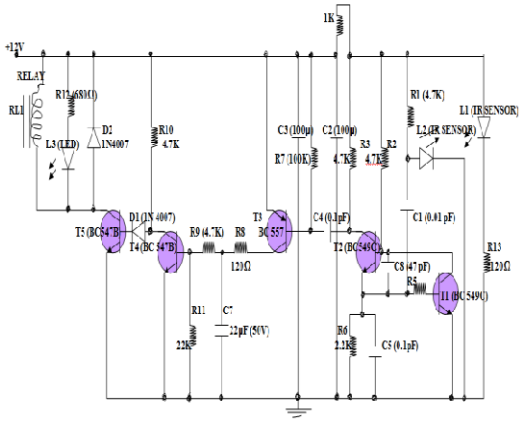

Fig.6 IR receiver circuit

IR sensor transmits infrared rays with timer circuit. These infrared rays are conventional by the IR receiver sensor. Transistor T1, T2 and T3 are used as Amplifier sections. During that time the relay was closed, there was no signal given to the microcontroller unit.

Obstacle crossing At normal condition time-

There is no difficulty crossing the middle of the sensors, T1 is on. This signal is transmitted by transistor T2,

T3 and T4. These flowing signal transistors are given on the T5, so that it will be closed. The relay is in there.

Double Acting 5/2 Solenoid Valve: [4] A solenoid is an electrical gadget that believers electrical energy into coalition and disturbance. They are also used for the operation of mechanical. processes so that the valve technology works. Solenoid push types or pull types can be. Push type solenoid is the one in which solenoid is electrically run when run.

Pull-type Solenoid is the one in which the smooth is lifted when sunlight is active. The Solenoid control valve is utilize to control the flow caption is canceled cut valve or solenoid valve. solenoid value used to paint in solenoids valves utilized

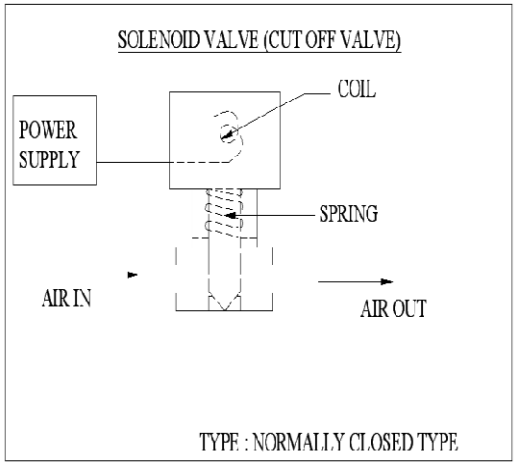

Fig.7 Solenoid valve

[4] DC Motor :- DC Motor is used to rotate the wheel which is used to move the machine from one place to another. Following are the specification of DC Motor: 30 RPM DC Motor Current :- 2.2 Ah Voltage :- 12 V

Fig 8 DC MOTOR

[4] Wheel :- The transfer machine is move from one place to another by using wheel for the rotary motion of it. Specifications of wheels are as follows: Radius – 10 cm, Wheel material - rubber and plastic.

Fig. 9 Wheels

III. ADVANTAGE

1. Air is available everywhere
2. Can be stored easily
3. It is Clean and non – pollutant
4. Transportable over long distances
5. It is high speed operation
6. Relatively low cost to produce
7. Technology can be easily learned

IV. LIMITATION

Compressed air needs good preparation. Dirt, humidity may not be present.
It is unlikely to reach in constant piston speed and uniform by means of compressed air.
The essential power contains the compressed air in inexpensive manner.

The wastage air which comes from the pneumatic piston cylinder is noisy.

V. CONCLUSION

Thus an automatic intelligent wall painting machine has been designed fabricated from painting wall easily an effectively. The machine can able to coat 3 feet height in a pass So the painting time can be reduce**.**

REFERANCES

[1] Automatic Wall Painting Using Lead Screws Andhale Satish1, Ansari Md. Aiman2, Ashtekar Keshav3, Asnewar Swapnil4, Prof. Sonawane D.P.5, Prof. Bhane A.B. International Journal of Emerging Technology and Advanced Engineering Volume 6, Issue 3, March 2016)
[2] Automatic sensor based wall painting robot Vani Mukundan1, Mohamed Sirajudeen K I2,
Nidhinsha3, Sheron B Joseph4 International Journal of Advances in Engineering & Scientific Research, Vol.4, Issue 1, Jan-2017

[3] automatic wall painting robot P. Keerthanaa1, K.Jeevitha2, V.Navina3, G.Indira4, S. Jayamani International Journal of Innovative Research in Science, Engineering and Technology Vol. 2, Issue 7, July 2013

[4] Fabrication of Automatic Pesticides Spraying Machine: Dhiraj N. Kumbhare1, Vishal Singh2, Prashik Waghmare3, Altaf Ansari4, Vikas Tiwari5, Prof. R.D. Gorle6. International Research Journal of Engineering and Technology (IRJET) Apr-2016