RESEARCH ARTICLE OPEN ACCESS

# TRANSMISSION LINE FAULT DETECTION USING GSM TECHNOLOGY

**Sharmili W. Drugkar[1] Krishna R. Maske[2] Bhagyashree Gadekar[3]**

*1. Student of Electrical (E&P) Engineering, MPCOE, Bhandara, 441904*

*2. Student of Electrical (E&P) Engineering, MPCOE, Bhandara, 441904*

*3. Assistant Professor of (E&P) Engineering, MPCOE, Bhandara, 441904*

***Abstract:***

In this paper a smart GSM based fault detection system is used to sufficiently and accurately indicate the fault occurred in the distribution system and transmission system. The proposed system has various protective equipment's, voltage and current sense section, microcontroller section, LED display section and GSM (global system for mobile communication) module. This system will help to the electricity board and service man of that area to detect the fault in short time and avoid the transformer damages. In this system various equipment are used such as Current transformer, Potential transformer, Microcontroller, RS-232 cable, GSM modem. The fault are detected, analyzed and classified by this system automatically with the help of Micro-controller. This system also gives the information about which type of fault occurred in transmission line such as L-L (line to line), L-G (line to ground), L-L-G (double line to ground) fault, L-L-L & L-L-L-G (symmetrical fault). And this information is send to the service provider company via SMS using GSM.

*Keywords:* **GSM technology, Fault, Microcontroller, Transformer, Transmission.**

## *I.* INTRODUCTION

In overall electrical power system, more than 80% faults occur in transmission line. In this paper the design and implementation of fault detection, classification and protection technique of transmission line are present.

When an electrical network, machines and equipments are in operating condition, they suffered by a different types of faults. Whenever the faults occur, the characteristic values of the transmission line may get change from real existing values to another values, until the networks such as lightning, wind, storm, tree falling on line, apparatus failure etc. In our proposed system, the phase voltages and phase current sense by CT & PT and these sensing values are continuously send to the microcontroller.

When fault occurred, the insulating path and conducting path get affected which causes the short circuit and open circuit of conductor. During ideal operating condition, the power system equipment operated at normal voltage and current rating. But in faulty condition, the voltage and current values are swing from their reference value. Normally our power system is protected by switch-gear and protection equipments like relays, circuit breaker, fuses to reduce the losses of service due to the electrical failure after the occurrence of faults.

Fault: In an electrical power system, a fault or fault current is any abnormal electric current that flows through the line. In three phase system, fault may occur between one or more phases and ground or it may involve only phases. There are two main types of faults:

A. Symmetric fault: This fault is also called as balanced fault. It affects all the three phases of transmission line equally. Approximately 5% faults are symmetric, in total transmission line faults.

B. Asymmetric fault: This type of faults are unbalanced faults. All the three phases of transmission line does not get affected by asymmetric fault. It is again divided into three types as follows:

1)Line-to-line fault: This fault occurs when there is a short circuit between two lines originated when those

two lines comes into physical contact with each other. Roughly 5% are asymmetric L-L fault.

2) Line-to-ground fault: This type of fault occur when there is a short circuit between one line and ground. This happen due to physical contact between line and ground conductor because of storm damages and lightning etc. This is the most frequent fault occur in transmission line faults.

3)Double line-to-ground fault: Whenever the two line come into the physical contact with each other and the ground conductor it termed as double line-to-ground fault. The percentage occurrence of this fault is 15-20%.

## *II.* FAULT IN THREE PHASE DEVICES AND THEIR CAUSES

A. Overvoltage: An overvoltage is point occurs when the system voltage increases over 110% of the nominal voltage rating. Overvoltage caused due to many reasons such as sudden reduction in loads, switching of loads, lightning strikes, failure of control equipment like voltage regulators, displacement of neutral. This point of overvoltage can damage to component connected to the supply.

B. Under-voltage: Generally this point occur when the voltage supplying the drive is too low. It is occur when supply voltage is less than nominal voltage rating for example, a 440 V machine powered by 220 V will caused the under-voltage.

C. Overheating: There is a occurrence of overheating, if the temperature of the equipments increases from the nominal values. Overheating occur also when the equipments are overloaded. Problem which causes overheating are short circuit, single line to ground fault, L-L fault etc. It can damage the windings of equipments and also damage the electrical system.

## *III.* PRAPOSED SYSTEM

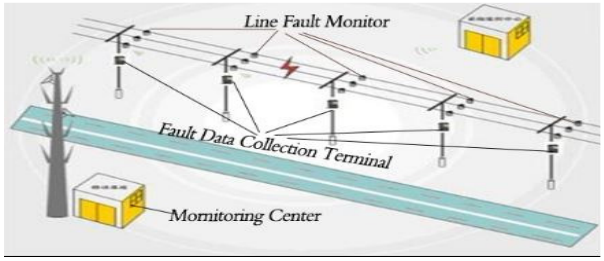


Figure: 1. Overview of multiple line fault detection system.

### *A. Block diagram*

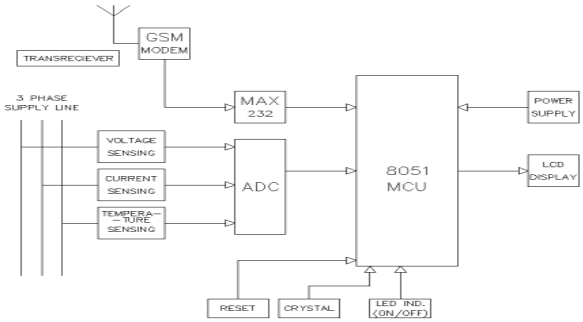


Figure: 2. Block diagram of multiple line fault detection system using GSM Technology.

### *B. Working*

Figure shows block diagram of multiple line fault detection using GSM technology. The three phase parameter i.e voltage, current, temperature senses by respective sensing equipment i.e CT PT & LM 35. Once the fault occurred in transmission line, voltage and current values varies from the nominal ranges. This values continuously send to the ADC (analog to digital converter), ADC convert this analog values into digital values which is required to the microcontroller, microcontroller takes digital values from ADC and compare with reference values. If the real time values are not identical to the reference values then microcontroller send signal to the GSM, which indicate that the fault occurred in the system( i.e change in the values of voltage, current & temperature) then GSM take this signal from microcontroller and send SMS to the service provider company as well area service man.

### *C. CIRCUIT INTERFACING WITH MICRO-CONTROLLER & LCD.*

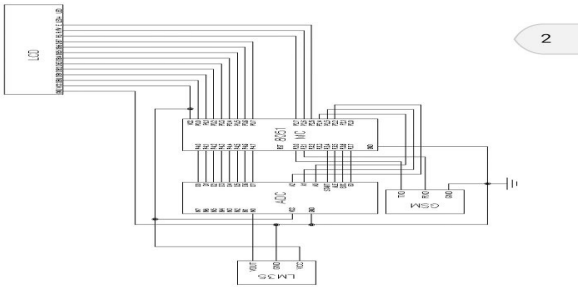


Figure: 3. Circuit Interfacing with Micro-controller & LCD

## *IV.* HARDWARE REQUIRED

### *A. Microcontroller 89s52*

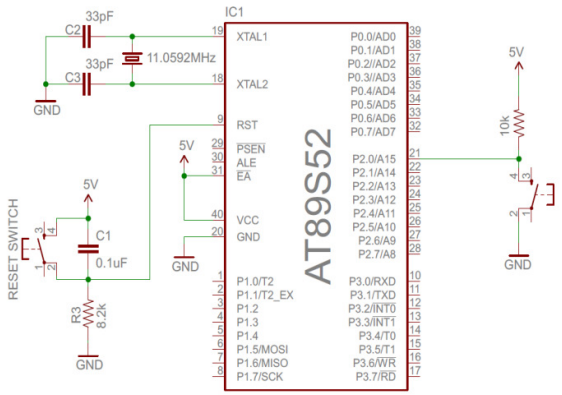


Figure: 4. Pin Diagram Of Microcontroller At 89s52

The 89S52 has 4 different ports, each one having 8 Input/output lines providing a total of 32 I/O lines. Those ports can be used to output DATA and orders do other devices, or to read the state of a sensor, or a switch. Most of the ports of the 89S52 have 'dual function' meaning that they can be used for two different functions.

The first one is to perform input/output operations and the second one is used to implement special features of the microcontroller like counting external pulses, interrupting the execution of the program according to external events, performing serial data transfer or connecting the chip to a computer to update the software. Each port has 8 pins, and will be treated from the software point of view as an 8-bit variable called 'register', each bit being connected to a different Input /Output pin.

### *B. Fault Display LCD*

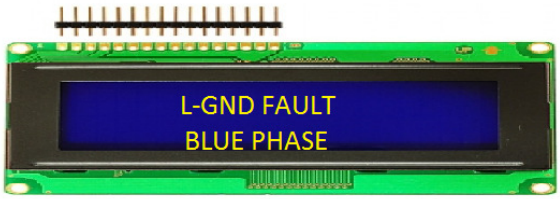


Figure: 5. Fault Display LCD

LCD (Liquid Crystal Display) screen is an electronic display module and find a wide range of applications. A 16x2 LCD display is very basic module and is very commonly used in various devices and circuits. These modules are preferred over seven segment and other multi segment LCDs. The reasons being: LCDs are economical; easily programmable; have no limitation of displaying special & even custom character (unlike in seven segments), animation and so on.

A 16x2 LCD means it can display 16 characters per line and there are 2 such lines. In this LCD each character is displayed in 5x7 pixel matrix. This LCD has two registers, namely, Command and Data [4].

The command register stores the command instructions given to the LCD. A command is an instruction given to LCD to do a predefined task like initializing it, clearing its screen, setting the cursor position, controlling display etc. The data register stores the data to be displayed on the LCD. The data is the ASCII value of the character to be displayed on the LCD. Click to learn more about internal structure of a LCD.

### *C. GSM MODEM*

Figure: 6. Module

GSM module is used to establish communication between a computer and a GSM system**.** Global System for Mobile communication (GSM) is an architecture used for mobile communication in most of the countries**.** Global Packet Radio Service (GPRS) is an extension of GSM that enables higher data transmission rate**.** GSM/GPRS module consists of a GSM/GPRS modem assembled together with power supply circuit and communication interfaces (like

RS-232, USB, etc) for computer. The MODEM is the soul of such modules.

## *V.* ADVANTAGE

1. This system gives the exact information about which type of fault occurred in the line such as L-G, L-L etc.
2. We can easily monitor the transmission system from the any corner of the world because of the GSM system that gives real time status of the system.
3. This system is more flexible than the existing system which can easily overcome the time required for finding the fault in any environmental condition.
4. We can easily mount the system on pole, because of its small size, light weight.

## *VI.* FUTURE SCOPE

The purpose of this paper is that to send a quick message to the service provider authority as soon as there is fault in transmission line. In this model, we predict the location of fault with the help of distance from pole to pole. In future we can have a GPS (global positioning system) attached to it so that it would be send exact location of fault occur in transmission line in terms of longitude and latitude. In future we can used appropriate programming for finding distance of fault from substation.

## *VII.* RESULT


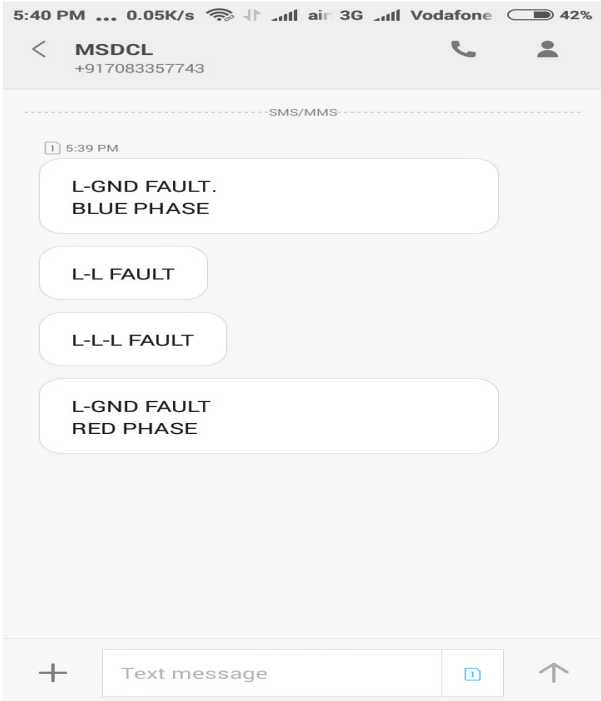


Figure: 7. Result displayed on LCD and Mobile phone Inbox

By using this system we get result shown in above fig. Here the result shows line-to-ground fault on LCD and the fault occurred is in blue phase. SMS also send to the service provider company and serviceman of that area. Similarly all the other faults such as L-L fault, L-L-G fault, etc can also be detected.

## *VIII.* CONCLUSION

Here, In this paper we have designed a GSM and Microcontroller based transmission line fault detection system that send information and classification of fault to the electricity board via SMS. Also it send real time values of current a voltage to the electricity board.

## *IX.* REFERENCES

1] Ms.Devjani Banerjee, Prof Dr.Mrs.N.R.Kulkarni , “Three Phase [Parameter Data Logging and Fault Detection Using GSM Technology”, International Journal of Scientific and Research Publications, Volume 3, Issue 2, February 2013 1 ISSN 2250-3153

[2] P.A. Gulbhile, J.R. Rana, B.T. Deshmukh, “ Review for overhead line fault detection using GSM technology”, International Journal of Advanced Research in Electrical, Electronics and Intrumentation Engineering,Volume5, Issue12, December 2016 ISSN 2278-8875

[3] Proteus PCB design and simulation software, Altium designer

[4] K. Saravanababu, P. Balakrishnan and K. Sathiyasekar, "Transmission line faults detection, classification, and location using Discrete Wavelet Transform," 2013 International Conference on Power, Energy and Control (ICPEC), Sri Rangalatchum Dindigul, 2013, pp. 233-238.

[5] Power system analysis and design by B.R. GUPTA.

.