RESEARCH ARTICLE OPEN ACCESS

NUMERICAL ANALYSIS of VARIOUS COMPONENTS of PULVERIZING MILL

Anilkumar.H.Ingle[1], Angiras Hajare[2], Akshay Gajbhiye[3], Dushant Madavi[4]

[1]Associate Professor. of Department of Mechanical Engineering, Smt. Radhikatai Pandav College of Engineering Nagpur, India. Email-id-anil_ingle943@rediffmail.com

[2]Student of Department of Mechanical Engineering, Smt. Radhikatai Pandav College of Engineering Nagpur, India. Email-id-hajareguddu@gmail.com

[3]Student of Department of Mechanical Engineering, Smt. Radhikatai Pandav College of Engineering Nagpur, India. Email-id-akshaygajbhiye421@gmail.com

[4]Student of Department of Mechanical Engineering, Smt. Radhikatai Pandav College of Engineering Nagpur, India. Email-id-dushantmadavi@gmail.com

Abstract:

Dal and chili milling industry is one of the major agro processing industries. dal and chili is the major part human diet. This paper is about the fabrication of multi pulverising mill which pulverise grains and chillies. In human life, the chilli powder is main ingredient in daily life. Chilii powder is use in daily food in every day. Grains are also use in daily life. In ancient time, humans are used stone crusher to crush grain. These methods are fully manually. In this method maximum two people are required to crush the grains. In traditional method of grinding grains are the grinding done by the beating the grain and second is the grinding done by rubbing the grain in between two stone. But after invention of flour mill, the human power is reduce. In this project we made pulverising mill which use to pulverise grain and also chilli in only one crusher mill. But for these two processes we use two blades for each operation. This research presents the improvement of design of flour milling machine. It is very low cost and two in one machine with very cheap to maintain.

Keyword- **Pulverizing mil, Chilli Powder, Grains, Hammer Blade.**

I. INTRODUCTION

Pulveriser or grinder is a mechanical device for grinding of many type materials. For example, pulveriser is used to pulverise the coal for combustion, dal crush for daily diet, chilli powder for daily food and many more.

There is some type of pulverisers.

Types of Pulverisers

1) Coal pulverisers
   - 1.1) Low Speed
   - 1.2) Medium Speed
     - 1.2.1) Ring and ball mill
   - 1.3) Vertical spindle roller mill
   - 1.4) Bowl mill
   - 1.5) High Speed
     - 1.5.1) Attrition
2) Beater Wheel Mill
3) Hammer Mill
4) Demolition pulveriser

India is the large producer of pulses around 14.5 million tons annually as known as pulses are more important component of both vegetarian as well as non-vegetarian in India pulses commonly known as the dal is the main source of protein in daily Indian diet dal is important component of food in India for the diet Channa, Mung, Masur, Urad and Ture dal are the different verities of pulses. Milling process is the main process of conversion of pulse grains into dal. Where in pulse grains are split into smaller size and then rendering it convenient for the cooking.

Also chilli is the main ingredient in daily food. India is also main producer of dry chilli and chilli powder. The people are makes delicious and spicy food by using of dried chillies. In traditional process, the chilli powder make by beating the chilli in between two stone and make powder of it. But in now day the milling machine is used to make powder of chilli.

In this research work, the machine is modified from old design. In milling machine we used electric motor for driving the crushing blade by the used of v-belt and pulleys which is mounted on both shaft. Here we pulverise the chilli and dal by different blades. Here, we used two blades i.e. chill crusher and hammer blade. Also use two sieves for both operations.

II. WORKING PRINCIPLE

The metal blade is design to operate on a shaft which is mounted on the two pulleys. The both blade are with same bore diameter is use for these two operation i.e. chilli and dal. The both blade are not fully fixed on the blade attachment. Blade is hanging on it.

Fig3. Chilli Crusher Blade

Fig1. Hand Grinding Stone
Fig2. Beating Stone
Fig4. Grains cutter blade

The shaft is attached to the electric motor through the v-belt. The electric motor is plays the main role to drive the crusher. Here we used 1.5hp electric motor. Motor is sufficient to gives the required torque to drive the crusher and split the pulses. The distance between the motor and the larger pulley called centre distance is play main role in the fabrication of crusher 5as this distance is the critical parameter for maintaining the crushing force. The centre distance fixed in this way that is more torque and less speed. The basic structure of the body of crusher is to be built using mild steel material angles. Power transmission from the motor by using the pulley is attached to the both shaft.

Sieves are part of the machine which place in the bottom side of crushing chamber. It is use for to separate the required size of grains. In this mill we use two sieves for chilli and pulses separately. For the chilli crushing, we use smaller holes size sieves and for pulses we use large holes size sieves. Sieves are removable as required as possible.

Fig5. Sieve for Grains

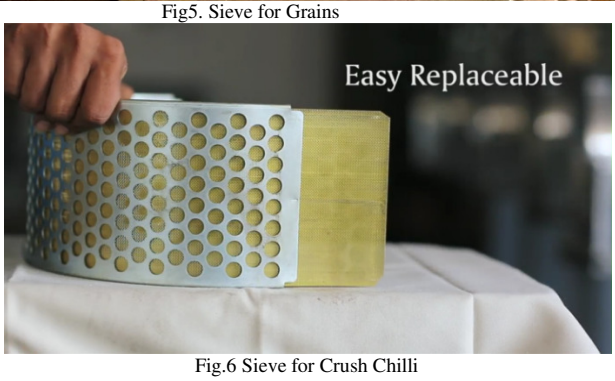

Fig.6 Sieve for Crush Chilli

III. METHODOLOGY

This pulverizing mill are actually a kind of crusher mill, which crushing the chillies and converted into chilli powder. Also shear the grains into the pulses. Both are these operation are in same machine. i.e. making chilli powder and shear grains.

In this pulverizing mill we use the 1.5 hp electric motor which can develop the required power to crushing the chillies

and shearing the grains into dal. The speed of motor is adjustable by shifting the belt as per required condition.
When electric motor is start to rotate then crushing blade is also rotate help through the v-belt. The grains are added from the hopper and its take up in crushing chamber. In crushing chamber, crushing blade is rotate continuously with high speed and because of centrifugal force the blade throws away from shaft centre. The grains are hitting to the blade and shear in two part as we required. Also same as the chilli is crushed in finest powder and then winnow by sieve. In this way the machine is work.

IV. CAD MODEL

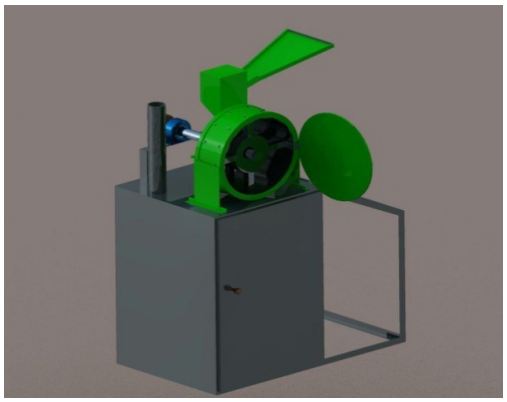

Fig7. Assemble view

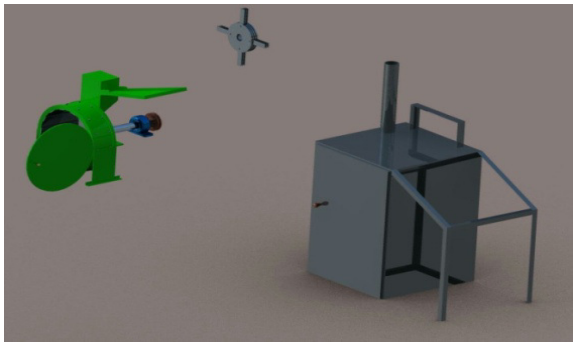

Fig8. Dissemble view

V. DIMENSIONS AND MATERIALS

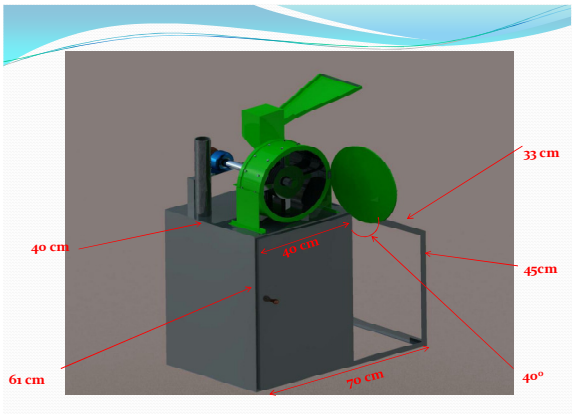

Fig9. Dimension of mill

Inner casing dia: 27.5 cm

Outer casing dia: 29.3 cm

Total height: 108 cm

Shaft dia. = 30 mm

Material = SAE 1976 (low carbon steel)

Bearing details

d= 30 mm

D= 62 mm

B= 16 mm

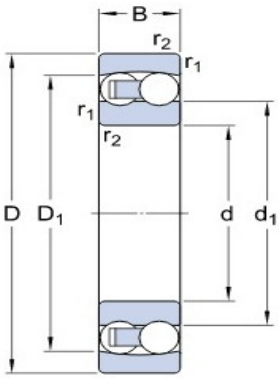

Fig10. Bearing Dimension

Bearing no. 1206/H (H=housing)

d_1= 40.3 mm

D_1= 51.9 mm

$r_{1,2}$ min. 1 mm

Material iron and steel

Pulley details

Here used 3 pulley

Material = cast iron

Motor pulley dia. = 63.5mm

Chilli crushing pulley dia. =152.4 mm

Grain crushing pulley dia. = 203.2 mm

VI. DESIGN CALCULATION

Here, we take 1.5 hp electric motor for driver.

P = 1.5 hp

P = 0.746 KW

Motor torque on power

T = 7.42 N-m

Speed of motor N= 1440 rpm

Design of v-belt for chilli crusher,

P_r = 1.119 KW

N_1 = 1440 rpm

Motor dia. D_1= 63.5 mm

Chilli cutter pulley dia. D_2= 152.4 mm

1) Design power

P_d= 1454.7 W

2) Cross section of belt

As per suggestions of power range we select 'A' section belt.

Width W = 13mm

Thickness T = 8 mm

Centrifugal tension K_c = 2.52

3) Speed of pulley

Assume negligible slip

$V_{driven}=V_{driver}$

N_2 = 600 rpm

4) Centre distance

$C = D_1+D_2$

C = 215.9 mm

5) Angle of lap

$$\theta_1 = \pi - \frac{D_2-D_1}{C}$$

$$\theta_1 = 2.79$$

6) Coeff. Of friction

$\mu_1=\mu_2$= 0.3 (usually)

7) Belt tension ratio

$$\frac{F_1}{F_2} = 13.07N$$

8) Power rating per belt

$$\frac{P}{B} = (F_w - F_c) \times \frac{e^{\mu\theta/\sin(\propto/2)} - 1}{e^{\mu\theta/\sin(\propto/2)}} \times V_p$$

F_w= working load = w2 = 169 N

F_c = centrifugal tension = 3.21 N

V_p = 4.78 m/s

$\frac{P}{B} = 0.733$ KW

9) No. of belts

No. of belts = 1.55 ≅ 1 belt

10) Length of belt

L = 780.08 mm

Design of v-belt for grains crusher,

P_r = 1.119 KW

N_1 = 1440 rpm

Motor dia. D_1= 63.5 mm

Chilli cutter pulley dia. D_2= 203.2 mm

1) Design power

P_d= 1454.7 W

2) Cross section of belt

As per suggestions of power range we select 'A' section belt.

Width W = 13mm

Thickness T = 8 mm

Centrifugal tension K_c = 2.52

3) Speed of pulley

Assume negligible slip

$V_{driven}=V_{driver}$

N_2 = 450 rpm

4) Centre distance

$C = D_1+D_2$

C = 266.7 mm

5) Angle of lap

$$\theta_1 = \pi - \frac{D_2 - D_1}{C}$$

$$\theta_1 = 2.61^{c}$$

6) Coeff. Of friction

$\mu_1 = \mu_2$= 0.3 (usually)

7) Belt tension ratio

$$\frac{F_1}{F_2} = 11.07 \text{ N}$$

8) Power rating per belt

$$\frac{P}{B} = (F_w - F_c) \times \frac{e^{\mu\theta/\sin(\propto/2)} - 1}{e^{\mu\theta/\sin(\propto/2)}} \times V_p$$

F_w= working load = w^2 = 169 N

F_c = centrifugal tension = 3.21 N

V_p = 4.78 M/s

$\frac{P}{B} = 0.720$ KW

9) No. of belts

No. of belts = 1.60 ≅ 1 belt

10) Length of belt

L = 970.62 mm

VII. PROPOSED COST of the MACHINE

S.N.	Material	Quantity	Cost
1	Main chassis frame	1	RS.2500
2	Main shaft	1	RS.350
3	Bearing with housing	2	RS.900

4	Circular cutter assembly	2	RS.1500
5	Driven pulley	2	RS.2800
	Driver pulley	1	RS.450
6	Belt A section	1	RS.560
7	Motor	1	RS.4500
8	Fabrication cost		RS.2400
9	Miscellaneous		RS.2500
10	Total cost		RS.18460

VIII. RESULT and DISCUSSION

The crushing machine was successfully fabricated and the machine was tested. This machine crushed grains and chillies simultaneously with ease both during electric motor and we got specific material you want.

IX. CONCLUSION

The crusher is constructed in such a way that it can operate it without much effort. It is made efficient and the cost of production of this crusher is very less. The crusher has been designed accordingly keeping in mind about the minimum power requirement and minimum effort. This crusher upon fabrication would serve it's the small scale industries.

X. REFERENCES

[1] *Z. Shayfull*, M.Fathullah, N.A. Shuaib, S.M. Nasir, 'Design and Development of Dried Chilies Seed Separating Machine', IJBAS-IJENS Vol: 11 No: 05 ,October 2011*

[2] *Ebunilo P. O., Obanor A. I. And Ariavie G. O, 'Design And Preliminary Testing Of A Hammer Mill With Endsuction Lift Capability Suitable For Commercial Processing Of Grains And Solid Minerals', Irjet-Volume2(6), 2010*

[3] *Mohd. Shahjad Aspak Sheikh, 'Design and Fabrication of Pedal Operated Chilli Crusher Machine', IJRITCC |Volume: 3 Issue: 2, February 2015*

[4] *Morrison, J. and Crossland, B. (2000), "An Introduction to the Mechanics of Machines". Longman Group Ltd (Publishers), Essex, UK, 4th Edition, pp5-192*

[5] *Khurmi, R and Gupta, J. (2008), "A Textbook of Machine Design". Eurasia Publishing House (PVT) Ltd, New Delhi, 1st Edition, pp677-819*

[6] *Hannah, J. and Stephens, R. (2004), "Advanced Theory and Examples in Mechanics of Machines". Edward Arnold (Publishers) Ltd, London; 5th Edition, pp.1-128.*

[7] *Hall, A; Holowenko, A. and Laughlin, H. (2004),"Theory and Problems of Machine Design". Tata McGraw-Hill Publishing Company Ltd, New Delhi. 4th Edition, pp6-89*

ISSN: 2277-9655

IJESRT

INTERNATIONAL JOURNAL OF ENGINEERING SCIENCES & RESEARCH TECHNOLOGY

COPYRIGHT FORM

Copyright agreement and authorship responsibility

To,
The Editor,
International Journal of Engineering Sciences & Research

Dear Sir,
Sub: Submission of an original paper with copyright agreement and authorship responsibility
Topic entitled: Numerical analysis of various components of pulverizing mill

- I as an author(s) warrant that the manuscript submitted is his/her/their own original work. All authors participated in the work and will take public responsibility for the work. All authors have approved the manuscript. The manuscript has not been communicated elsewhere for publication. All mater included in the manuscript does not infringe upon any existing copyright or other than copyright. The manuscript does not violate any intellectual property right of any person or entity.
- I acknowledge that it is a condition of acceptance by the editor that the publisher, Research India Publications acquires automatically copyright in the manuscript throughout the world
- I confirm that I have obtained all the necessary permissions to include in the paper items such as quotations, figures, and the results of government sponsored research.
- I enclose where necessary written permission of authors and publishers to use any copyright material (e.g. previously published figures and tables).

Thanking you
Yours sincerely,

Author name and address	Signature and Date
1. Anilkumar H. Ingle	
2. Angiras Hajare.	
3. Akshay Gajbhiye.	
4. Dushant Madavi	21/03/18
5.	
6.	
7.	

http: // www.ijesrt.com © International Journal of Engineering Sciences & Research Technology
Correspondence address: 116, Sukhdev Nagar, Ext-1, Airport Road, Indore(M.P), Pin- 452005, INDIA
Note: All the legal matters are subject to Indore Jurisdiction
* In event of any claim paper will removed from the website without any intimation to the author and charges are not refundable