RESEARCH ARTICLE OPEN ACCESS

Real time design and development of Li-Fi technology for wireless data transmission

Priyanka B. Jawanjar
Mtech Research Scholar,
NCOET, Nagpur

Prof. Naziya Pathan
Asst. Professor,
NCOET, Nagpur

Prof. Shyam Dubey
Asst. Professor & HOD,
NCOET, Nagpur

Abstract:

Li-Fi is the acronym for wireless-communication systems which uses light as a carrier for data rather than traditional radio Frequencies [1], which is Wi-Fi. The advantage of Li-Fi is it can be used in sensitive areas such as in Aircraft without causing any interference. But, there is one disadvantage that light waves cannot penetrate walls. Its implementation includes use of white LED light bulbs at the Downlink transmitter. By applying a constant current, these devices can be used for illumination. With fast variations of the current, the optical output varies at extremely high speeds, which is used to setup Li-Fi. During operation if the LED is on, a digital 1 is transmitted, if it's off a 0 is transmitted. Switching the LEDs on and off provides better way of transmitting data. Thus, we only require some LEDs and a controller that codes data into those LEDs and by varying the rate at which the LED's flicker [2] on the basis of the data we want to encode. This method can be further enhanced using an array of LEDs for parallel data transmission, or using mixtures of red, green and blue LEDs to alter the light's frequency with each frequency encoding a different data channel. Such advancements promise a theoretical speed of 10 Gbps – meaning one can download a full high-definition film in just 30 seconds

Keywords: **Photodiod, ATMega16, LiFi, LM324, VB.net**

I. INTRODUCTION

Li-Fi is a new wireless communication technology which enables a wireless data transmission through LED light. Li-Fi is based on a unique ability of solid state lighting systems to create a binary code of 1s and 0s with a LED flickering that is invisible for human eyes. Data can be received by electronic devices with photodiode [2] within area of light visibility. This means that everywhere where LEDs are used, lighting bulbs can bring not only The light but wireless Connection at the same time. With increasing demand for wireless data, lack of radio spectrum and issues with hazardous electromagnetic pollution, Li-Fi appears as a new greener, healthier and cheaper alternative to Wi-Fi. The term was first used in this context by Harald Haas in his TED [1] Global talk on Visible Light Communication. The technology was demonstrated at the 2012 Consumer Electronics Show in Las Vegas using a pair of Casio smart phones to exchange data using light of varying intensity given off from their screens, detectable at a distance of up to ten meters. In October 2011 a number of companies and industry groups formed the Li-Fi Consortium, to promote high-speed optical Wireless systems and to overcome the limited amount of radio based wireless spectrum available by exploiting a completely different part of the electromagnetic spectrum. The consortium believes it is possible to achieve more than 10 Gbps, theoretically allowing a high-definition film to be downloaded in 30 seconds. Li-Fi has the advantage of being able to be used in sensitive areas such as in aircraft without causing interference. However, the light waves used cannot penetrate walls [5].Later in 2012, Pure VLC, a firm set up to commercialize Li-Fi, will bring out Li-Fi products for firms installing LED-lighting systems. Moreover Li-Fi makes possible to have a wireless Internet in specific environments (hospitals, Airplanes etc.) where Wi-Fi is not allowed due to interferences or security considerations.Justification and objective of carrying out the research work.

II. LITERATURE SURVEY

The term Li-Fi denotes "light fidelity" and it is a form of bidirectional, networked, mobile, and high-speed wireless communications closely equivalent to Wireless Fidelity (Wi-Fi) [1]. According to recent market research predictions, Li-Fi technology is expected to reach the market value of

8,500 Million USD by 2020 [10]. The technology seems promising and even National Aeronautics and Space Administration (NASA) recently announced plans to study Li-Fi's potential uses in space travel [6]. Li-Fi is the name given to describe visible light communication technology applied to obtain high speed wireless communication. It derived this name by virtue of the similarity to Wi-Fi. Wi-Fi works well for general wireless coverage within buildings, and Li-Fi is ideal for high density wireless data coverage inside a confined area or room and for relieving radio interference issues. Basic comparison of Li-Fi over Wi-Fi is given below in table

SR. NO.	BASIS FOR COMPARISON	WIFI	LIFI
1.	RANGE	SMALL	LARGE
2.	SECURITY	CAN BE HACKED	CANNOT BE HACKED
3.	RATE OF DATA TRANSMISSION	SLOWER	MUCH FASTER
4.	TRAFFIC CONTROL	LESS	MORE
5.	WHERE CAN BE USED	WITHIN A RANGE OF WLAN INFRASTUCTURE, GENERALLY INSIDE A BUILDING	ANYWHERE, WHERE LIGHT SOURCE IS PRESENT
6.	COST	COSTLY	CHEAP
7.	WORKING CONCEPT	VARIOUS TOPOLOGIES	DIRECT BINARY DATA SERVING

Table:-LIFI OVER WIFI

Li-Fi technology is based on LEDs or other light source for the transfer of data. The transfer of the data can be with the help of all kinds of light, no matter the part of the spectrum that they belong. That is, the light can belong to the invisible, ultraviolet or the visible part of the spectrum.

III. COMPONENTS USED

A. Hardware components

The major components are given below.

1. ATMega16 Microcontroller
2. Photodiode Trans receiver Module
3. ELCD-16x2 Display
4. Motor Driver L293D
5. DC Battery
6. LM324 Op amp
7. Voltage Regulator
8. USB to TTL Converter
9. LED Bulb
10. PCB

B. Software components

1. AVR Studio
2. PCB Artist
3. Win AVR

C. Language used: Embedded C

IV. PRAPOSED METHODOLOGY

A typical indoor Li-Fi system link is illustrated in Fig. 1 [7]. It consists of a light source, line-of-sight (LOS) propagation medium, and a light detector. Information (streaming content), in the form of digital or analog signals, is input to electronic circuitry that modulates the light source.

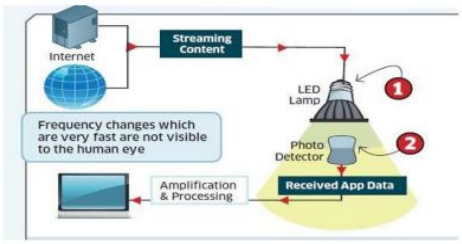

Fig1: Concept of Working.

The source output passes through an optical system (to control the emitted radiation, e.g., to ensure that the transmitter is eye safe) into the free space. The received signal comes through an optical system (e.g., an optical filter that rejects optical noise, a lens system or concentrator that focuses light on the detector), passes through the photo diode (PD), and the resulting photo-current is amplified before the

signal processing electronics transforms it back to the received data stream [4].

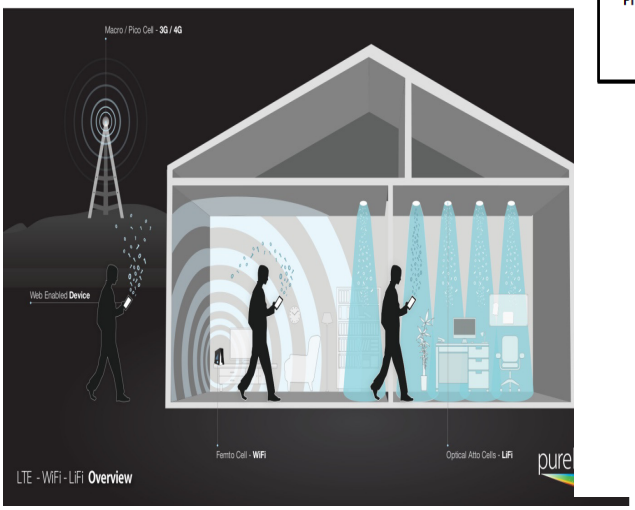

Fig:2 Implementation Concept

Unlike WiFi, the technology uses visible light spectrum instead of the increasingly congested radio frequency (RF) spectrum. Similarly to WiFi, this technology allows connection of different web-enabled devices such as computers, smart TVs, smart phones, etc. to internet; provides the inter-connection of WiFi enabled things such as

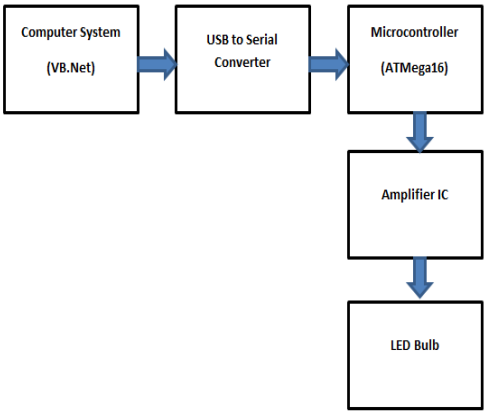

Fig:3 Transmitter Section

refrigerators, watches, cameras, etc. in Internet of Things (IoT); and makes off-loading from cellular networks possible, addressing this way capacity needs for mobile broadband connections (Fig. 2).

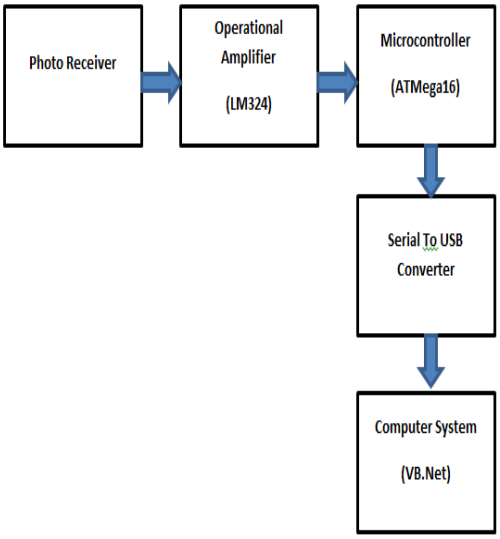

Fig:4 Receiver section

It is clear from the above block diagram that the transmitter end consisting of Computer software for data transmission via microcontroller using USB to serial communication system, which will be decoded into digital data by the microcontroller and again encode into digital bits transmission through LED bulb. At the receiver end a photodiode is attached with the system for digital light detection, further it will be amplified by the operational amplifier for sending to the microcontroller via serial transmission. The microcontroller attached at the receiver end will decoded into original format and display in on the LCD screen and parallelly it will transmit its data to the other computer system via usb to serial medium.

V. APPLICATIONS

- **Underwater communications:** Since radio waves cannot be used under water because these waves are strongly absorbed by sea water within feet of their transmission and this renders it unusable underwater but Li-Fi is suitable for underwater communication

- **Health sector:** Since Wi-Fi is not safe to be used in hospitals and other various health care sectors because it penetrates

human body. Li-Fi can be implemented and well suit in this sector.

- **Internet anywhere:** street lamps, light of vehicles can be used to access internet anywhere in footpaths, roads, malls, anywhere where light source is available.

- **Safety and management**: it can be used to update traffic information at almost every instant and it will be easy for traffic police to deal with traffic and catch the one who breaks the rule.

VI. CONCLUSION & FUTURE SCOPE

The possibilities are numerous and can be explored further. If Li-Fi technology can be put into practical use, every bulb can be used something like a Wi-Fi hotspot to transmit wireless data and we will proceed toward the cleaner, greener, safer and brighter future. The concept of Li-Fi is currently attracting a great deal of interest, not least because it may offer a genuine and very efficient alternative to radio-based wireless. As a growing number of people and their many devices Access wireless internet, the airwaves are becoming increasingly clogged, making it more and more difficult to get a reliable, high-speed signal. This may solve issues such as the shortage of radio-frequency bandwidth and also allow internet where traditional radio based wireless isn't allowed such as aircraft or hospitals. One of the shortcomings however is that it only work in direct line of sight**.**

In future, the LI-FI technology can be used for

- **Underwater Applications :** The LEDs can be embedded in the water bed to reveal the various impurities underwater. The various leds will communicate with each other to give the overall amount of impurity in that particular area**.**

- **Education systems:** Li-Fi is the latest technology that can provide fastest speed internet access. So, it can replace Wi-Fi at educational institutions and at companies so that all the people can make use of Li-Fi with the same speed intended in a particular area.

- **Medical Applications:** Operation theatres (OTs) do not allow Wi-Fi due to radiation concerns. Usage Wi-Fi at hospitals interferes with the mobile and pc which blocks the signals for monitoring equipments. So, it may be hazardous to the patient's health. To overcome this and to make OT tech savvy Li-Fi can be used to accessing internet and to control medical

- In future, the LIFI technology can be used in vehicle to vehicle communication.

References

1. *H. Haas and N. Serafimovski, "LiFi unlocking unprecedented wireless pathways for our digital future," IEEE ComSoc Technology News, Dec. 2016. [Online].Available:www.comsoc.org/ctn/does-5g-have-bright-future-light-based-communications-wireless-solutions*
2. *www.lificonsortium.org/*
3. *15.the-gadgeteer.com/2011/08/29/li-fi-internet-at-the Speed- Of-light.*
4. *H. Elgala, R. Mesleh, and H. Haas, Indoor optical wireless communication: Potential and state-ofthe-art," IEEE Communications Magazine, vol. 49, no.9, pp. 56–62, 2011.*
5. *L. Grobe and A. Paraskevopoulos, "High-speed visible light communication systems," IEEE Communications Magazine, pp. 60–66, Dec. 2013.*
6. *NASA. (2015). [Online]. Available: https://blogs.nasa.gov/kennedy/2015/07/30/partnership-maylead-to-advanced-communication-technology/*
7. *Jyoti Rani, PrernaChauhan, RitikaTripathi, ―Li-Fi (Light Fidelity)-The future technology In Wireless communication‖, International Journal of Applied Engineering Research, ISSN 0973-4562 Vol.7 No.11 (2012).*
8. *Vitthal S Saptasagare- Next of Wi-Fi an Future Technology in Wireless Networking Li-Fi Using Led Over Internet of Things, International Journal of Emerging Research in Management &Technology ISSN: 2278-9359 (Volume-3, Issue-3)(2014).*
9. *International Journal of Emerging Technology and Advance Engineering Website: www.ijetae.com (ISSN 2250-2459, ISO 9001:2008 Certified Journal, Volume 5, Issue 10, October 2015) :Smart Trolley System for Automated Billing using RFID and ZIGBEE*
10. *Fraunhofer Institute, "Li-Fi – Optical Wireless Communication," Fraunhofer Institute for Photonic Microsystems, Dresden, Germany, Tech. Rep., 2016.*