RESEARCH ARTICLE OPEN ACCESS

IOT BASED SMART ENERGY METER

Akshay wase[1] , Kajal manekar[2] ,Parag Kumbhalkar[3] , Prof. Geetanjali V. Ghode[4]
1(Electrical Department, Smt.Radhikatai Pandav college, Umrer Raod,,Nagpur,
2 (Electrical Department, Smt.Radhikatai Pandav college, Umrer Raod, Nagpur,
3(Electrical Department, Smt.Radhikatai Pandav college, Umrer Raod,, Nagpur,
4(Electrical Department, Smt.Radhikatai Pandav college, Umrer Raod,, Nagpur,

Abstract:

According to the market requirements of Energy Meter there is necessity of smart Energy Meter. . Nowadays the system will use Zig Bee system for communication protocol. This aims at resolving the shortcomings of the technology of the traditional Energy Meter Reading, by combining the characteristics of the ZigBee technology. The live metering system is designed to make the prevailing electricity billing system simpler and efficient There are more chances of manual error, delay in processing, tampering of the meter and misusage of the Electricity by other sources.

Keywords — **Meter, Zig bee, low cost, IEEE,AVR**

I. INTRODUCTION

In Maharashtra, there are more than crore meters for electricity that are read every month, at a cost in salaries, transportation and other expenses that tops Rs. 3848.4 crore (2006-2007) . A meter-reading system would still require someone driving by every meter and getting a reading through a hand-held receiver, but even newer technology - called an automatic meter reading system (AMR) - would eliminate even that need. Automatic meter reading technology can not only save human resources, but more importantly may improve the accuracy and real time of the meter, enabling management sector to access to data messages timely and accurately. No cable wiring can save human and material resources, so investment is considerably economical. Wireless communication links can be quickly built, engineering cycle significantly shortened, and has better scalability compared to a wire-line system . If a fault occurs, only check wireless data module for causes quickly, and then restore the system back to normal operation. In substation there is a requirement of calculating the average daily load, average monthly load, and average annual load. In our project Live Energy meter reading all this calculation are too easy as well as we can also. Calculate the individual consumer load at our substation or distribution centre

II. PROJECT OBJECTIVE

AMR stands for **A**utomatic **M**eter **R**eading. A device which remotely obtain meter readings and transmits this data to the system's computer via communication media such as Zig Bee (RF communication module) or dedicated cables for processing. AMR devices can detect outages, remotely connect and disconnect services, detects tampering as well as other uses. Economic benefits include increased cash flow, lower labor and equipment cost, increased accuracy and lower costs. Some customer satisfaction benefits include improved service quality, more customer choices and faster response time.

III. CURRENT MANUAL SYSTEM

Let's try to expand the problems in manual meter reading on the following resources:

- Meter reading resource: Time

1. Time to access the site.
2. Time to read the meter manually.

- Meter reading resource: Accuracy/re-work/Manpower cost.

1. Accuracy of noting the readings.
2. Chances of errors while reading.
3. Errors while recording what was read.
4. Errors during data entry.

- Meter reading resource: Hard to access meters: (any meter which takes more than 15 minutes to access)

1. Rural accounts
2. Indoor meters
3. Obstacles

- Manual Meter reading: Commercial Implications

1. Conveying tamper recording remains on the meter reader's loyalty.
2. No clue on demand/ over drawls by the consumer.
3. Delay in meter readings, delay bills, delayed revenue, delay in cash-flow

- Cost associated with meter reading

The cost associated with meter reading can have the following headings:

IV. Proposed Project

Meter reading: Cost	
Cost heading	Sub cost headings
Manpower cost	Salaries, Risk and Insurances
Transportation cost	Cost of ownership (Vehicle), variable cost (Fuel)

Smart **M**eter **R**eading. A device which remotely obtain meter readings and transmits this data to the system's computer via communication media such

as IOT(Internet communication module) This devices can detect outages, remotely connect and disconnect services, detects tampering as well as other uses. Economic benefits include increased cash flow, lower labor and equipment cost, increased accuracy and lower costs. Some customer satisfaction benefits include improved service quality, more customer choices and faster response time.

The project proposes an efficient implementation for IoT (Internet of Things) used for monitoring and controlling the power system via World Wide Web. We can manage power from any where, through an Internet gateway, by means of low power wireless communication protocols. The user here will move directly with the system through a web-based interface over the web.

SMR stands for **Smart M**eter **R**eading. A device which remotely obtain meter readings and transmits this data to the system's computer via communication media IOT for processing. SMR devices can detect outages, remotely connect and disconnect services, detects tampering as well as other uses. Economic benefits include increased cash flow, lower labor and equipment cost, increased accuracy and lower costs. Some customer satisfaction benefits include improved service quality, more customer choices and faster response time.

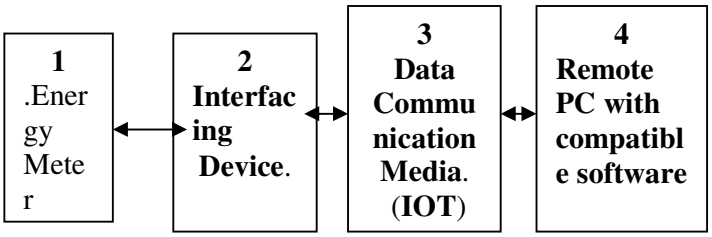

Fig:1 Block Diagram Of SMR System

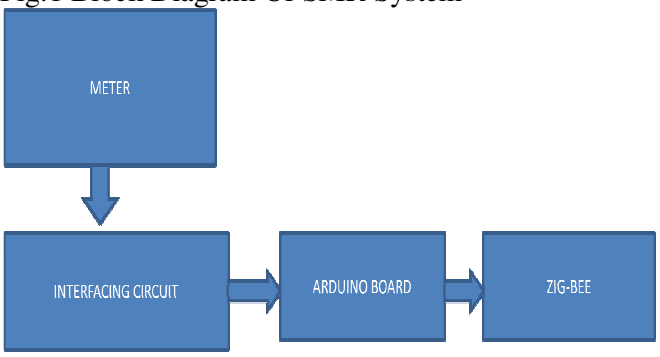

Receiving End

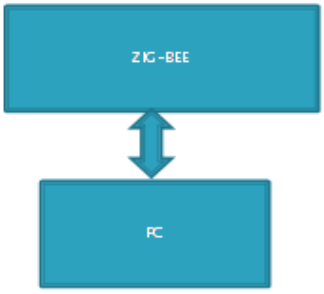

1. Energy Meter
2. Interfacing Device
3. Data Communication Media
4. Remote PC with compatible software

1. Energy Meter:

Energy meter is a device which is used to measure the energy consumed by the customer .Basically energy meter is of two types Electro-Mechanical meter and Digital meter. Now a days digital meter are used because they are having high accuracy, with limited control and theft detection capability at nodes.

2 Interfacing Device:

It is a device which takes out readings from meter and passes those readings to the remote pc through communication media. It also consists of a circuit which can switch ON/OFF power supply of customer. Basically it is a IOT based system which is operated according to program which is stored in a arduinoof arduino board.

3 Data Communication Media:

For transporting the data from the energy meter to the Host PC a communication media is necessary. Communication can be done by two ways,

a. Wired Communication: power lines, phone lines, dedicated lines.

b. Wireless Communication: RF, GSM**,** GPRS.

Service provider can use any communication media depending upon the services available to the service provider In our project we are giving a concept of IOT medium.

The Internet of things (IoT) is the inter-networking of physical devices, vehicles (also referred to as "connected devices" and "smart devices"), buildings, and other items—embedded with electronics, software, sensors, actuators, and network connectivity that enable these objects to collect and exchange data.

In 2013 the Global Standards Initiative on Internet of Things (IoT-GSI) defined the IoT as "the infrastructure of the information society." The IoT allows objects to be sensed or controlled remotely across existing network infrastructure, creating opportunities for more direct integration of the physical world into computer-based systems, and resulting in improved efficiency, accuracy and economic benefit in addition to reduced human intervention. When IoT is augmented with sensors and actuators, the technology becomes an instance of the more general class of cyber-physical systems, which also encompasses technologies such as smart grids, smart homes, intelligent transportation and smart cities. Each thing is uniquely identifiable through its embedded computing system but is able to interoperate within the existing Internet infrastructure. Experts estimate that the IoT will consist of almost 50 billion objects by 2020.
Typically, IoT is expected to offer advanced connectivity of devices, systems, and services that goes beyond machine-to-machine (M2M) communications and covers a variety of protocols, domains, and applications.[12] The interconnection of these embedded devices (including smart objects), is expected to usher in automation in nearly all fields, while also enabling advanced applications like a smart grid,[13] and expanding to areas such as smart cities.[

4 Remote PC with compatible software:

The heart of the meter reading station is the Meter Reading Software which resides in the PC at the Meter Reading Station. It is a standalone system which is

responsible for collecting meter reading, storing them to the data base, calculation of bills, switching ON/OFF of power supply, and providing analysis facility.

V. MAIN INTERFACING CIRCUIT AND TRASMITER MODULE

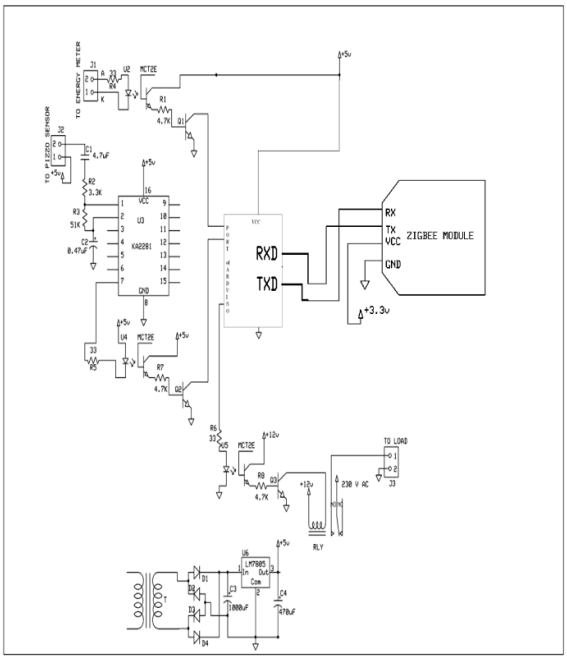

PCB Lay-Out

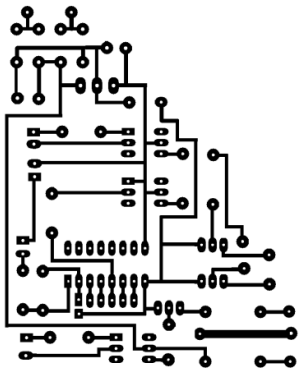

SERVER SIDE REIVER CIRCUIT MODULE

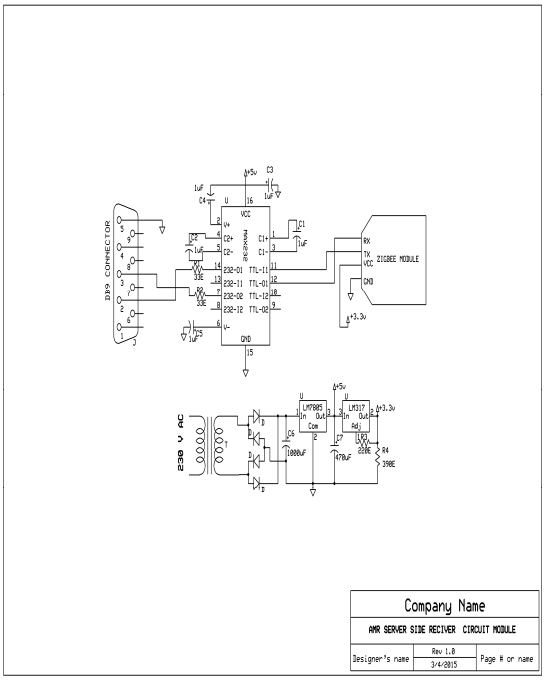

VI. CIRCUIT DISCRIPTION

In our project live meter reading arduino which is situated at the meter side sends the data to the base

station. At base station receiver circuit is present which receives the data from meter side.

Receiver circuit consists of another zig bee which is paired with the sender zig bee. Sending end zig bee sends information and receiving end zig bee receive this information. Data transmit at the frequency band of 2.4 GHz. When arduino transmit data 'a' (which represents meter reading) through zig bee another zig bee receives this 'a'. Zig bee transmits data in the form of EM waves. When receiver end zig bee receives this signal it sends to the next IC in the form of electrical signal.

Receiver circuit also consist of Max 232 IC which is a TTL to Serial converter. Output of zig bee is in the form of TTL (+2V…….+5V for logic 1 & 0V……...0.8V for logic 0).

We have to interface this receiver circuit to the computer (PC) for storing the meter reading as well as controlling the ON/OFF control of meter. To interface with the computer we have to convert the TTL logic into RS232 logic, for this purpose we use the IC MAX232. MAX232 is a dual driver/receiver that includes a capacitive voltage generator. The drivers (T_1 & T_2), also called transmitters, convert the TTL/CMOS logic input level into RS232 level. The transmitter (pin 10-T2 in) take input from zig bee module's data out pin (pin 2 of zig bee module) and send the output to RS232's receiver at pin 7 (T2 out) of MAX232. We use four capacitors, two for doubling the voltage and other two for inverting the voltage. The capacitors are connected between pin 1 and pin 3, pin 4 and pin5, pin 2 and VCC, and pin 6 and GND and one more VCC and GND.

Similarly when controller sends 'B' for tempering then above process repeats and value 'A' & 'B' simultaneously sends to the RS 232 port at pin no. 2.

VII. Basic operation

According to the conventional model of current flow (originally established by Benjamin Franklin and still followed by most engineers today), current is assumed to flow through electrical conductors from the positive to the negative pole. In actuality, free electrons in a conductor nearly always flow from the negative to the positive pole. In the vast majority of applications, however, the actual direction of current flow is irrelevant. Therefore, in the discussion below the conventional model is retained.

In the diagrams below, when the input connected to the left corner of the diamond is positive, and the input connected to the right corner is negative, current flows from the upper supply terminal to the right along the red (positive) path to the output, and returns to the lower supply terminal via the blue (negative) path.

Bridge Rectfier

A diode bridge is an arrangement of four (or more) diodes in a bridge circuit configuration that provides the same polarity of output for either polarity of input. When used in its most common application, for conversion of an alternating current (AC) input into a direct current (DC) output, it is known as a bridge rectifier. A bridge rectifier provides full-wave rectification from a two-wire AC input, resulting in lower cost and weight as compared to a rectifier with a 3-wire input from a transformer with a center-tapped secondary winding.

The essential feature of a diode bridge is that the polarity of the output is the same regardless of the polarity at the input. The diode bridge circuit is also known as the "Graetz circuit" after its inventor, German physicist Leo Graetz.

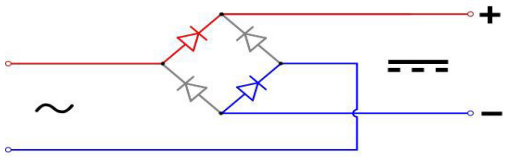

. Bridge Rectifier Case 1

When the input connected to the left corner is negative, and the input connected to the right corner is positive, current flows from the lower supply terminal to the right along the red (positive) path to the output, and returns to the upper supply terminal via the blue (negative) path

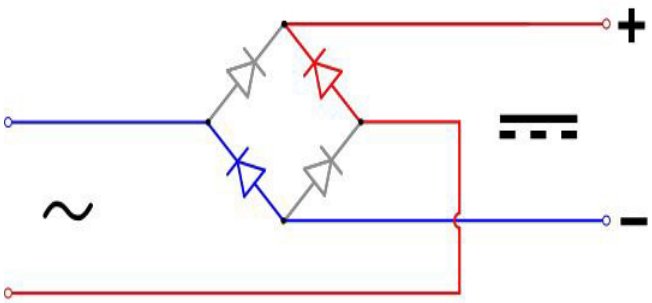

Fig 3.3 Bridge Rectifier Case 2

In each case, the upper right output remains positive and lower right output negative. Since this is true whether the input is AC or DC, this circuit not only produces a DC output from an AC input, it can also provide what is sometimes called "reverse polarity protection". That is, it permits normal functioning of DC-powered equipment when batteries have been installed backwards, or when the leads (wires) from a DC power source have been reversed, and protects the equipment from potential damage caused by reverse polarity.

AC, half-wave and full wave rectified signals.

Prior to the availability of integrated circuits, a bridge rectifier was constructed from "discrete components", i.e., separate diodes. Since about 1950, a single four-terminal component containing the four diodes connected in a bridge configuration became a standard commercial component and is now available with various voltage and current ratings.

SOFTWARE/ HARDWARE REQUIREMENT

Hardware Requirements:

- Optocoupler (MCT2E)
- Max 232
- Switching transistor
- Relay
- Interfacing IC
- Serial RS232 port
- Voltage regulator IC (7805)
- Voltage regulator IC (LM317)
- Microcontroller IC (Atmega16)
- ZIG BEE Trans-receiver
- Step down transformer
- Diode (1N007)
- Capacitors
- Registers

SOFTWARE REQUIRMENT

- C#.NET

Testing of Power supply circuit

The entire components are tested with the help of multimeter. After testing of component we fix the component on the wet board. Now we give the supply to the transformer and input waveform is to

be checked. This procedure is simultaneously carried out for Rectifier, Filter and Regulator circuit. We check the waveform but it is not according to our assumption, because the waveform is started and then it goes to decreasing. Due to this the output voltage is also decreases.

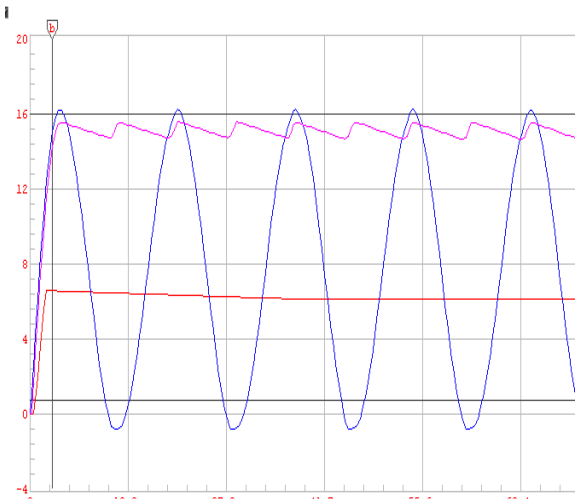

VIII. ADVANTAGES OF AUTOMATIC METER READING

Benefits of AMR to utilities include:

Electrical Company Benefits**:-**

- Smart automated processes instead of manual work.
- Accurate information from the network load to optimize maintenance and investments.
- Customized rates and billing dates.
- Streamlined high bill investigations.
- Detection of tampering of Meters.
- Accurate measurement of transmission losses.
- Better network performance and cost efficiency.
- Demand and distribution management.
- More intelligence to business planning.
- Better company credibility.

Customer Benefits:-

- Precise consumption information.
- Clear and accurate billing.
- Automatic outage information and faster recovery.

IX. FUTURE SCOPE

Originally AMR devices just collected meter readings electronically and matched them with accounts. As technology has advanced, additional data could then be captured, stored, and transmitted to the main computer, and often the metering devices could be controlled remotely. This can include events alarms such as tamper, leak detection, low battery, or reverse flow. Many AMR devices can also capture interval data, and log meter events. The logged data can be used to collect or control time of use or rate of use data that can be used for water or energy usage profiling, time of use billing, demand forecasting, demand response, rate of flow recording, leak detection, flow monitoring, water and energy conservation enforcement, remote shutoff, etc. Advanced Metering Infrastructure, or AMI is the new term

coined to represent the networking technology of fixed network meter systems that go beyond AMR into remote utility management. The meters in an AMI system are often referred to as smart meters, since they often can use collected data based on programmed logic.

X. CONCLUSION

Automatic Meter Reading (AMR) is a unique solution for problems in existing manual system. Automatic Meter Reading is self assured automation system. Implementation of Automatic Meter Reading with the help of standalone system is an innovative idea. There are more chances of manual error, delay in processing, tampering of the meter and misusage of the Electricity by other sources but with the help of Automatic Meter Reading, we can easily overcome this anomalies.

Standalone AMR system is most suitable to implement transfer of unit. Using prepaid services, we can make proper use or storage of electricity. Economic benefits include increased cash flow, lower labor and equipment cost, increased accuracy and lower costs some customer satisfaction benefits include improved service quality, more customer choices and faster response time.

REFRENCES

1. *Corral, P.; Coronado, B.; de Castro Lima, A.C.; Ludwig, O. ," Design of Automatic Meter Reading based on Zigbee", Miguel Hernandez Univ., Elche, Spain, Latin America Transactions, IEEE(Revista IEEE America Latina),Jan- 2012,pp. 1150-1155.*
   Department of Electronics ant Telecommunication, Nagpur University, Nagpur, Maharashtra 440030, India
2. *DESIGN AND IMPLEMENTATION OF WIRELESS AUTOMATIC METER READING SYSTEM*
   http://www.ijest.info/docs/IJEST11-03-03-106.pdf
3. *Microchip Technology Inc. Microchip Stack for the ZigBee™ Version 1.0,2005.*
4. *Shang-Wen Luan Jen-Hao Teng Shun-Yu Chan* Lain-Chyr Hwang , "Development of a Smart Power Meter for AMI Based on ZigBee Communication", Department of Energyal Engineering,I-Shou University, Kaohsiung, Taiwan.*
   SHOEB S. SHEIKH
5. *ZigBee Alliance, ZigBee Specification Version 1.0, http:// www.ZigBee.org, December 14th, 2004*
6. *ZigBee Document 074994r08, ZigBee AMI Technical Requirements Document Version 08, september19th, 2007.*
7. *ZigBee Document 075356r08ZB, Advanced Metering Initiative Profile Protocol Specification Version 08, November 13th, 2007.*