RESEARCH ARTICLE OPEN ACCESS

Simulation Of Capacitor Bank For Improvement Of Voltage Profile At Distribution Center(Review)

Neha Dighade[1], Vaishali Takras[2], Rahul Harinkhede[3] ,Prof S.Bhuyarkar[4]

1(Department of Electrical Engineering , SRPCE, Nagpur
2 (Department of Electrical Engineering , SRPCE, Nagpur
3 (Department of Electrical Engineering , SRPCE, Nagpur
4 (Department of Electrical Engineering , SRPCE, Nagpur

Abstract:

Day by day the demand of electricity is increasing that's why the voltage profile is reduces, so to improve the voltage profile of the power system, capacitor bank should be inserted in shunt with the distribution line after distribution transformer of substation. If the voltage profile does not maintain constant alternately power factor is decreased and decreasing power factor resulting power losses. This losses increases the current and due to heat increased above the capacity of equipment which is installed in the substation and load side that will be reduced the life of equipment.

Shunt capacitor bank's are used to improve the power factor correction, quality of electric supply and efficient operation of power system. It's relatively inexpensive and can be easily installed anywhere on the network. Wasted energy capacity, also known as poor power factor, is often overlooked. It can result in poor reliability, safety problems and higher energy costs. The lower your power factor, the less economically your system operates.

Keywords **—Capacitor bank, Power factor, Power Triangle, Load, Improved Voltage, Reactive Power…**

I. INTRODUCTION

A electrical energy power consumption has gone up by laps and bounces. It is still increasing at a fast rate and overloading the electrical power system. This problem is compounded by inadequate investment in T&D over a long period, as there are unacceptable voltage drop and system losses. A lot of work has been carried out of installation of capacitors from H.T side which had strengthen the system by

1) Reducing losses
2) Decreasing the load and avoided public outcry

The capacitors used in the transmission systems for the purpose of voltage regulation, act to improve power factor. In these installations, reactive output rating of a unit capacitor is chosen at KVAR and two groups are connected in series, and three of these groups in star connection with floating neutral make a three phase bank. The series reactor is connected in series with capacitors at neutral side of the bank. Power factor can be defined as the ratio of active power to the apparent power. Generally, it is called as the cosine of angle between the voltage and current. Why do we use cosine of angle between voltage and current? This is because; consider power triangle derived from the phasor diagram of voltage/current. At the receiving-end till the entrance to sub- transmission networks, and distribution networks. A large number of distribution systems have run into problems such as low voltage regulation, low power factor, large amount of losses and less efficiency, overloading and discontinuity of supply. It is necessary to improve the working of the power distribution systems to reduce losses, improve voltage regulation, improve power factor etc. On a power line, besides the active power, the reactive power must also be available for inductive loads.

II. CAPACITOR BANK

A capacitor bank is a gathering of a few capacitors associated in arrangement or shunt with each other to store electrical vitality. The subsequent bank is then used to neutralize or remedy a power figure slack an AC control supply. Capacitors are electrical/electronic parts which store electrical vitality. Capacitors comprise of two conveyors that are isolated by a protecting material or dielectric. At the point when an electrical current

is gone through the conduit combine, a static electric field creates in the dielectric which speaks to the put away vitality. Not at all like batteries, this put away vitality isn't looked after uncertainly, as the dielectric takes into consideration a specific measure of current spillage which brings about the slow dispersal of the put away vitality. A capacitor bank is a gathering of a few indistinguishable capacitors between associated in parallel or in arrangement with each other as required.

Advantages using Capacitor Bank

1. Diminished utility request charges:-

Utility request charges fixing to the power factor is the essential reason related with establishment of PFCC's, and there is every now and again a sensible quantifiable profit if the office has a low slacking power factor before PFCC establishment. Most electric service organizations charge for greatest metered request in light of either the most astounding enlisted request in kilowatts (KW meter), or a level of the most astounding enrolled request in (KVA meter), whichever is more noteworthy. In the event that the power factor is low, the level of the deliberate KVA will be altogether more prominent than the KW request. While utility duties fluctuate, an ordinary levy is income nonpartisan at a 0.85 slacking power factor, with punishments underneath this level and credits over this level. The credits may stretch out to 0.95 Pf slacking or may even reach out to solidarity control factor (KW = KVA).

2. Expanded load conveying abilities in existing circuits

Burdens drawing responsive power likewise request receptive current. Introducing power factor revision capacitors toward the finish of existing circuits close to the inductive burdens decreases the current conveyed by each circuit. The diminishment in current stream coming about because of enhanced power factor may enable the circuit to convey new loads, sparing the cost of redesigning the appropriation arrange when additional limit is required for extra hardware or gear. Furthermore, the lessened current stream diminishes resistive (I^2t) misfortunes in the circuit.

3. Enhanced voltage

A lower control factor causes a higher current stream for a given load. As the line current expands, the voltage drop in the conductor builds, which may bring about a lower voltage at the gear. With an enhanced power factor, the voltage drop in the conductor is decreased, enhancing the voltage at the gear.

4. Lessened power framework misfortunes

In spite of the fact that the budgetary come back from conductor misfortune decrease alone is never adequate to legitimize the establishment of capacitors, it is an appealing extra advantage, particularly in more seasoned plants with long feeders or in field pumping activities. Framework conductor misfortunes are corresponding to the current squared and, since the current is lessened in guide extent to the influence factor change, the misfortunes are contrarily relative to the square of the influence factor.

TYPES OF CAPACITOR BANK

Unit of a capacitor bank is normally called capacitor unit. The capacitor units are manufactured as single phase unit. These single phase units are connected in star or delta to farm a complete 3 phase capacitor bank. Although some rare manufacturers 3 phase capacitor unit but normally available capacitor units are single phase type. The

1. Externally fused capacitor bank.
2. Internally fused capacitor bank.
3. Fuse less capacitor bank.

III. POWER TRIAGLE

Power Triangle is the portrayal of a correct edge triangle demonstrating the connection between dynamic power, receptive power and obvious power. At the point when every segment of the present that is the dynamic segment (Icosϕ) or the responsive part (Isinϕ) is increased by the voltage V, control triangle is gotten appeared in the figure beneath.

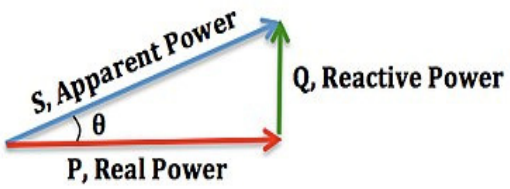

The power which is really devoured or used in an AC Circuit is called True power or Active Power or genuine power. It is estimated in kilowatt (kW) or MW. The power which streams forward and backward that implies it moves in both the course in the circuit or respond upon it, is called Reactive Power. The responsive power is estimated in kilovolt-ampere receptive (KVAR) or MVAR. The result of root mean square (RMS) estimation of voltage and current is known as Apparent Power. This power is estimated in KVA or MVA.

When a dynamic segment of current is increased by the circuit voltage V, it brings about dynamic power. It is this power which produces torque in the engine, warm in warmer, and so on. This power is estimated by the wattmeter. When the receptive part of the current is increased by the circuit voltage, it gives responsive power. This power decides the power factor, and it streams forward and backward in the circuit. When the circuit current is increased by the circuit voltage, it brings about evident power. From the power triangle appeared over the power, the factor might be controlled by taking the proportion of genuine energy to the clear power.

As we probably am aware basically control implies the result of voltage and current yet in AC circuit with the exception of unadulterated resistive circuit there is normally a stage contrast amongst voltage and current and subsequently VI does not give genuine or genuine power in the circuit.

A. Improving Power Factor

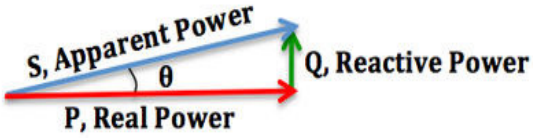

As the power factor (i.e. COS θ) builds, the proportion of genuine energy to clear power (which = COS θ), increments and methodologies solidarity (1), while the edge θ diminishes and the receptive power diminishes. [As COS θ → 1, its greatest conceivable esteem, θ → 0 thus Q → 0, as the heap turns out to be not so much responsive but rather more absolutely resistive].

B. Reducing Power Factor

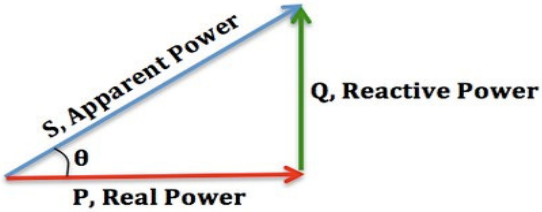

As the power factor decreases, the ratio of real power to apparent power also decreases, as the angle θ increases and reactive power increases.

C. Requirement for power factor improvement

The request of dynamic power is communicating Kilo Watt (KW) or uber watt (mw). This power ought to be provided from electrical creating station. Every one of the courses of action in electrical pomes framework are done to get together this essential necessity. In spite of the fact that in exchanging power framework, responsive power dependably comes in to picture. This receptive power is communicated in KVAR/MVAR.

The request of this responsive power is basically begun from inductive load associated with the framework. These inductive burdens are for the most part electromagnetic circuit of electric engines, electrical transformers, inductance of transmission and appropriation systems, enlistment heaters, fluorescent lightings and so on. This responsive power ought to be legitimately remunerated something else, the proportion of real power devoured by the heap, to the aggregate power i.e.

vector whole of dynamic and responsive power, of the framework turns out to be very less.

The types of gear used to remunerate receptive power. There are principally two types of gear utilized for this reason. (1) Synchronous condensers (2) Static capacitors or Capacitor Bank synchronous condensers can create responsive power and the generation of receptive power can be controlled. Because of this managing advantage, the synchronous condensers are exceptionally appropriate for revising power factor of the framework, yet this hardware is very costly contrasted with static capacitors. That is the reason synchronous condensers, are advocated to utilize just for voltage control of high voltage transmission framework. The direction in static capacitors can likewise be accomplished to some stretch out by split the aggregate capacitor bank in 3 areas of proportion 1 : 2 : 2. This division empowers the capacitor to keep running in 1, 2, 1 + 2 = 3, 2 + 2 = 4, 1 + 2 + 2 = 5 stages. In the event that still further advances are required, the division might be made in the proportion 1 : 2 : 3 or 1 : 2 : 4. These divisions influence the static capacitor to bank more costly yet at the same time the cost is much lower them synchronous condensers. It is discovered that most extreme advantage from repaying supplies can be accomplished when they are associated with the individual load side. This is for all intents and purposes and financially conceivable just by utilizing little appraised capacitors with singular load not by utilizing synchronous condensers.

D. Static Capacitor Bank

Static capacitor can further be subdivided in to two categories, (a) Shunt capacitors (b) Series capacitor

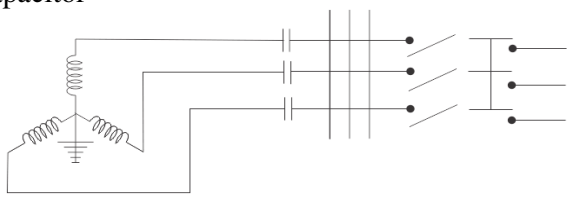

Series Capacitor Bank

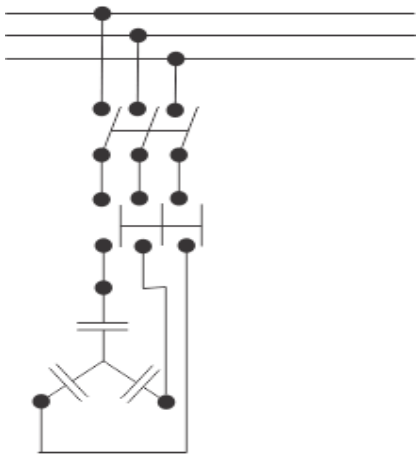

Capacitor Bank

These These classes are for the most part in light of the strategies for interfacing capacitor save money with the framework. Among these two classifications, shunt capacitors are all the more normally utilized as a part of the power arrangement of all voltage levels.

There are some particular focal points of utilizing shunt capacitors, for example :-

1. It lessens line current of the framework.
2. It enhances voltage level of the heap.
3. It likewise decreases framework Losses.
4. It enhances control factor of the source current.
5. It lessens heap of the alternator.
6. It lessens capital speculation for each super watt of the Load.

All the previously mentioned benefits originate from the reality, that the impact of capacitor lessens responsive current coursing through the entire framework. Shunt capacitor draws relatively settled measure of driving current which is superimposed on the heap current and thus diminishes receptive segments of the heap and subsequently enhances the power factor of the framework. arrangement capacitor then again has no influence over stream of current. As these are associated in arrangement with stack, the heap current dependably goes through the arrangement capacitor bank. All things considered, the capacitive reactance of arrangement capacitor kills the inductive reactance of the line subsequently, decreases, powerful reactance of the

line. In this manner, voltage direction of the framework is progressed. Be that as it may, arrangement capacitor bank has a noteworthy disservice. Amid broken condition, the voltage over the capacitor perhaps raised up to 15 times more than its appraised esteem. In this way arrangement capacitor probably complex and expand defensive supplies. Along these lines, utilization of-arrangement capacitor is bound in the additional high voltage framework as it were.

E. Star Connected Capacitor

The active parts of capacitor unit are composed by two aluminum foils separated by impregnated papers. The thickness of the papers may vary from 8 microns to 24 microns depending upon the voltage level of the system. The thickness of the aluminum foil is in the order of 7 microns. For low voltage applications, there may be one layer of impregnated paper of suitable thickness between the foils but for higher voltage applications more than one layer of impregnated papers are placed between the aluminum foil to avoid unwanted circulation of short circuit current between the foil
The capacitor sections are wound into rolls there after they are flattened out, compressed into packs, enclosed in multiple layers of heavy paper insulations and inserted into the containers. When the lid had been welded to the container, the capacitor unit is dried and integrated in large autoclaves by a combination of heat and vacuum. After the paper is completely dried and all gases removed from the insulation the capacitor tank is filled with impregnate degassed at the same vacuum.

IV. CONCLUSIONS

The poor power factor is nothing but the wastage of electric energy in the form of power loss. i.e. I^2R loss which will cause the variation of load during the peak load period. This variation will cause voltage drop in distribution line and current is increase. Due to increasing current heat will produce and result in losses. These may damage the line equipment the main cause of poor power factor is present of inductive load in the circuit. Due to inductive load it draws undesirable reactive power for neutralizing this power we have to add the capacitor bank after the distribution transformer and losses will be reduced.

ACKNOWLEDGMENT

we are wishes to express our greatful thank to our teacher department of electrical engineering, Rashtrasant tukdoji maharaj Nagpur university. We are also wishes our special thanks to our parents friends for their support and help. we are also thankful for their punctuality and kindly support to hardwork.

REFERENCES

1. *"Power Quality Improvement Using Distribution Static compensator*
2. *with Energy Storage System" 2000 IEEE pp.916-920*
3. *Rozmyslaw Mienski, Ryszard Pawelek and Irene Wasiak "Application of STATCOM Controllers for power quality improvement" 2002 IEEE PP 620- 625*
4. *Bhim Singh, Senior Member, IEEE, Alka Adya, A.P.Mittal, Member, IEEE, and J.R.P. Gupta "Modeleing, Design and Analysis of different Controllers for DSTATCOM" 2008 IEE Eproc. PP 978-996*
5. *H.M. Khodr, Member IEEE, J.M. Yusta, Member IEEE, Zita Vale, Member IEEE and Carlos Ramos, Member IEEE "An Efficient Method for Optimal Location and Sizing of Fixed and Switched Shunt Capacitors in Large Distribution Systems" Page no 1-09 IEEE 2008*
6. *SHUNT CAPACITOR BANK SWITCHING TRANSIENTS: A TUTORIAL.*