RESEARCH ARTICLE OPEN ACCESS

Monitoring Transformer parameters system by using Zigbee Technology(Implementation)

Nishigandha G Bobade[1], Ashmika M Dhongadi[2], Prof. Nilesh Deshmukh[3]

1(Student of Electrical Engineering, SRPCE, Nagpur .

2 (Student of Electrical Engineering, SRPCE, Nagpur .

3 (Assistant Professor Electrical Engineering, SRPCE, Nagpur .

Abstract:

In ordinary ways all the Industrial or Electrical machineries are operated and controlled by the manual operations. So there is work in progress but sometimes there isn't actually instant co-task between system and operator if there is emergency or faulty conditions. Hence, we are designing a system where communication exists between system and operator. For that we require Transformer, microcontroller, analogy to digital converter. As we know Distribution transformer is a major and main component of power system and its proper functioning is important for system operations. To reduce the chances of unexpected failure and happen unscheduled outage, on-line wireless monitoring has become the normal working to evaluate continuously the conditions of the transformer with it. This paper presents design review of a system to screen and operation of a distribution transformer like overload, temperatures, oil level detection. The system can be installed at the distribution transformer site and by observing and calculating above parameters it will help the utilities to desirable utilize transformers and to know the problems before any sudden great failure.

***Keywords* — Distribution transformer, Wireless protocol, microcontroller, over current, temperatures.**

I. INTRODUCTION

This On line Wireless checking and symptomatic of energy transformers has pulled in significant consideration for a long time. The primary targets are to anticipate constrained blackouts, show satisfactory over-burden, survey the rest of the protection life and decrease upkeep costs. To accomplish these objectives, the checking framework producers must take after techniques, which are in accordance with the interests of transformer proprietors. Transformer is the key gear in control framework, to guarantee its sheltered and stable task is imperative. Transformers either raise a voltage to diminish misfortunes, or abatements voltage to a sheltered level. "Checking" is here characterized as on-line accumulation of information and incorporates sensor improvement, estimation methods for on-line applications. It is exceptionally troublesome and costly to build the correspondence wires to screen and control every conveyance transformer station. Here ZigBee is utilized for conveying the checked parameters.

The failures of transformers in benefit are comprehensively due to: Over Load condition temperature rise, low oil levels, over load, Earth establishing , and inappropriate establishment and support. Out of these variables temperature rise, low oil levels and over load, require ceaseless observing to spare transformer life. A disseminated transformer systems remote checking framework builds the unwavering quality of circulation organize, by observing basic data, for example, oil temperature, and oil level of transformer. Information are gathered consistently. Observing the transformers for issues before they happen can avoid shortcomings that are exorbitant to fix and result in lost administration life.

II. PROPOSED TECHNOLOGY

The proposed procedure depends on robust innovation meets security unwavering quality and speediest in activity. It comprises of a detecting

framework, flag molding electronic circuit, and controller. It is installed at the transformer site and the finding parameters recorded using the analog to digital converter of the embedded system. The gained parameters are prepared and recorded in the framework memory. framework will help the framework to keep running under dependable condition and distinguish issues before any disappointment. For above outcome we are utilizing a little advance down transformer of 12 V, 1 Amps rating and little globule are associated as a heap. In this undertaking we are utilizing CT transformer for estimating load current. Additionally, we are utilizing Temp. Temperature Sensor for giving any ascent of temperature, oil level sensor is likewise utilized which distinguishes any fall of oil level. The estimations of voltage, current and temperature and level of oil of the transformer is specifically connected to one of the info ports of the smaller scale controller. Alongside this, a show is associated in the info port of the small scale controller esteem then the transformer will naturally close down and thus transformer life will be expanded. We additionally outlined Two-path correspondence here by which we can get some information about given parameter esteem just by sending Wireless Data to it so we can have watch over transformer. For this it isn't important for the administrator to sit in the framework premises which was the situation at customary framework.

BLOCK DIAGRAM:

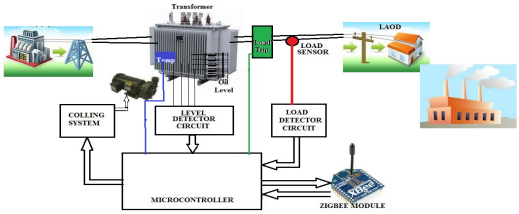

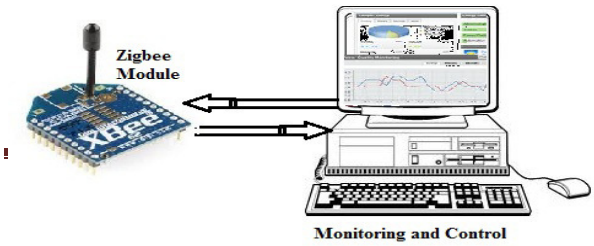

II. CIRCUIT DIAGRAM:

Power supply:

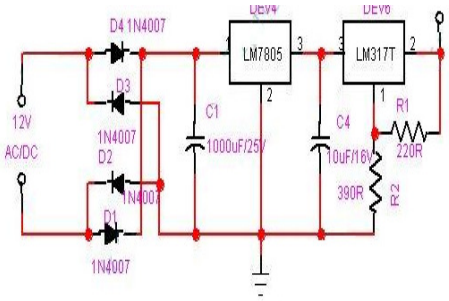

III. MAIN CIRCUIT ATMEGA16:

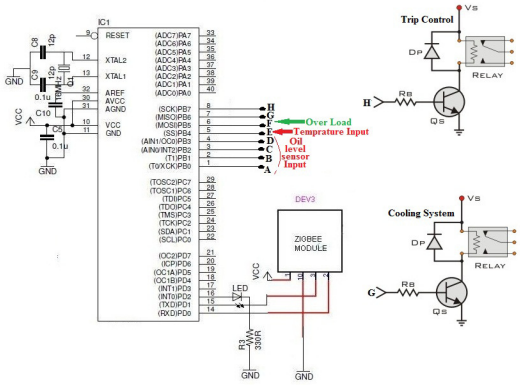

The ZIGBEE interface is another part of the transmitter section. The stick 3 (information in) of ZIGBEE module is associated with the USART transmission (TX-25) stick of port C in PIC. This remote transmission takes after USART conventions and is as per IEEE 802.15.4. ZIGBEE is a handset, in the transmitter area it is utilized as the transmitter. The recipient address of this ZIGBEE module is set as the address of the ZIGBEE module in the primary server, so information is send to this collector as it were. It is a low power; minimal effort remote work organizing standard and it utilizes the ISM band for

its transmission. The Controller requires oscillator for clock age, for this a precious stone oscillator 16 MHZ is associated between stick 13 and 14. Parasitic capacitor of 33pf is used to increase the stability of the oscillator. In pin 1 of the PIC a switch is connected for resetting the registers. Pin 1 is the master clear. During normal operation its value is high, when the switch is pressed all the registers of the PIC is cleared. The supply to the PIC (5V) is given by the supply circuitry given in fig 4.1. The supply is given to pin 11of the PIC. The supply to ZIGBEE module (3.3V) is given by LM317, which is given to pin 1 of ZIGBEE.

IV. OIL LEVEL CIRCUIT:

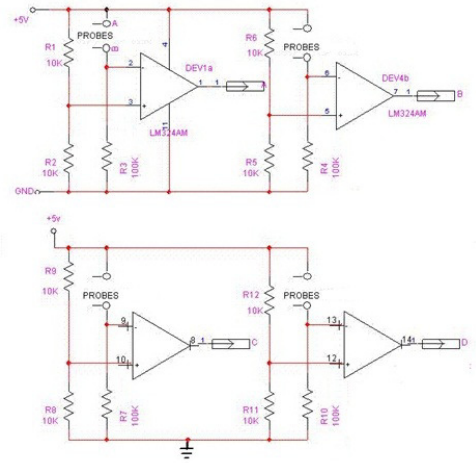

Figure: Oil level detector circuit

The circuit includes sensor parts fabricated utilizing operation amp IC LM324.

Operation amps are designed here as a comparator. There affectability can be changed with the assistance of variable resistor. Level sensor wires are embedded in the Transformer to detect the Oil level of the transformer. The voltage from the copper plats are nourish to comparator operational intensifier LM324 to contrast and referred to voltage, at that point as result we get rationale yield either false (rationale zero "0" 0v) or genuine (rationale one "1" or 5v) contingent on the copper detecting voltages from level detecting mechanical assembly.

Yield shape LM324 is encouraged to microcontroller to transmit information over recipient segment by means of ZigBee module.

V. TRANSISTORS RELAY LOAD CONTROL AND COOLING SYSTEM CONTROL

VI. At that point the transistor works as a "solitary post single-toss" (SPST) strong state switch. With a zero-flag connected to the Base of the transistor it turns "OFF" acting like an open switch and zero gatherer current streams. With a positive flag connected to the Base of the transistor it turns "ON" acting like a shut switch and most extreme circuit current moves through the gadget. A case of a NPN Transistor as a change being utilized to work a transfer is given underneath. With inductive loads, for example, transfers or solenoids a flywheel diode is put over the heap to disseminate the back EMF created by the inductive load when the transistor switches "OFF" thus shield the transistor from harm. On the off chance that the heap is of a high present or voltage nature, for example, engines, radiators and so on, at that point the heap current can be controlled by means of a reasonable transfer as appeared.

VII. PC INTERFACING CIRCUIT:

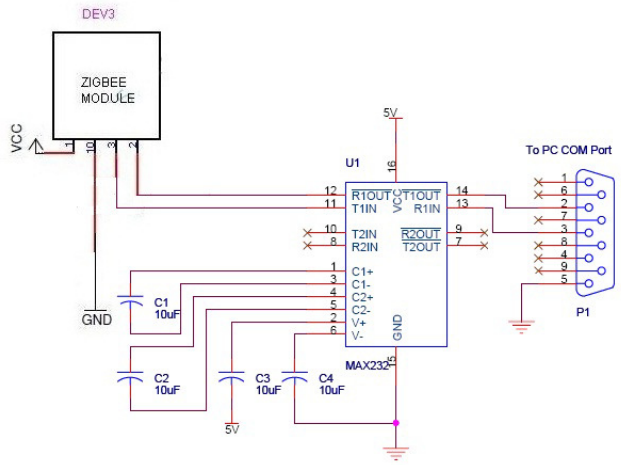

In the receiver section the ZIGBEE module can be used as receiver. This module receives the data send by the transmitters. The supply to the ZIGBEE module (3.3V) is given by the supply circuitry in fig with LM317.

VIII. To interface with the PC, we need to change over the TTL rationale into RS232 rationale, for this reason we utilize the IC MAX232. MAX232 is a double driver/beneficiary that incorporates a capacitive voltage generator. The drivers (T1 and T2), additionally called transmitters, change over the TTL/CMOS rationale input level into RS232 level. The transmitter (stick 10-T2 in) take contribution from ZIGBEE's information out (stick 2 of ZIGBEE) and send the yield to RS232's recipient at stick 7 (T2 out) of MAX232. We utilize four capacitors, two for multiplying the voltage and other two for upsetting the voltage. The capacitors are associated between stick 1 and stick 3, stick 4 and pin5, stick 2 and VCC, and stick 6 and GND. The transmitter yield (T2 out) from MAX232 (RS232 rationale) is associated with stick 2 (get information) of RS232 port. In this manner the information got are given to PC. The stick 5 of RS232 port is associated with ground.

IX. ADVANTAGES

- Devices can be operated from anywhere in the world.
- Efficient and low-cost design.
- Low power consumption.
- Real time monitoring.
- The system is very simple.
- Easy to operate.
- Data is more secure.
- Saves manual labour by automatically uploading and logging attendance in any given personal computer.

X. APPLICATIONS

1.This system can be implemented in industries.
2.This system can be used to monitoring and controlling the home appliances.

XI. CONCLUSION

With modern technology it is possible to monitor a large number of parameters of distributed transformer at a relatively high cost. The challenge is to balance the functions of the monitoring system and its cost and reliability. In order to get effective transformer monitoring system to a moderate cost, it is necessary to focus on a few key parameters. WDTMS is able to record and send abnormal parameters of a transformer to concerned office. It works on Wireless technology.

REFERENCES

1. *C.E.Lin, M.Ling, and C.L.Huang (1993). "An expert system for transformer fault diagnosis using dissolved gas analysis". IEEE Transactions on Power DeliveryYo1 8, No 1 January 1993*
2. *C. Bengtsson, "Status and Trends in Transformer Monitoring" IEEE Transactions on Power Delivery, Vol. 11, No. 3, July 1996.*
3. *Abdul-Rahman AI-Ali, et al., "GSM-Based Distribution Transformer Monitoring System" IEEE MELECON 2004, May 12-15, 2004, Dubrovnik, Croatia.*
4. *Li Cai and Nina Dai 'The Home Security System Based on ZigBee Technology' IEEE Transactions 2010.*
5. *Digi International Inc,XBee ZNet2.5/XBee-PRO ZNet2.5 OEM RF Modules, Product Manual v1.x.4x - ZigBee Protocol For OEM RF Module Part Numbers: XB24-BxIT-00x,Digi International , Inc.11001 Bren Road East Minnetonka.*
6. *V. Mayalarp, N. Limpaswadpaisarn, T. Poombansao, and S. Kittipiyakul, "Wireless mesh networking with XBee," in 2nd ECTI-Conference on Application*

Research and Development (ECTI-CARD 2010), Pattaya, Chonburi, Thailand, 10-12 May 2010.

7. *Liebfried, T., "Online Monitors Keep Transformers in Service", IEEE Computer Applications in Power, July 1998. p.36-42.*
8. *CIGRE WG A2-27 "Recommendations for condition monitoring and condition assessment for transformers", 2007.*
9. *IEEE PC57.143 TM/D20, "Draft Guide for Application of Monitoring Liquid Immersed Transformers and their Components", March 2008.*