RESEARCH ARTICLE OPEN ACCESS

Smart stick for visually Impaired using IOT

C.B.Rohini[1],C.Pushpalatha[2],B.pradeepchethan [3],E.K.Praveena[4]

(ECE,Aditya college of Engineering ,affiliated to JNTUA,Madanapalli

Email:rohinibhaskaran9@gmail.com,pushpa.chittem28@gmail.com,pradeepchethan417@gmail.com, praveenachinnu317@gmail.com)

Abstract:

Eventhough we have more population who are visually challenged around the world,our developed technology has not given any advancement to satisfy their needs.This shows that negligence towards the visually challenged people.Our investigation lead us to develop a design which will embrace technologies such as Ultrasonic sensing,Global positioning System(GPS),Pulse sensing,Messagingservices.This design will combine sensors and wireless components to contribute a safe and accurate navigation mechanism.Few problems we have faced during our survey are determining economical and interoperable clarifications,joining the obstacle detection and location detection with efficient coding techniques.A cost-effective product is the aim to design our prototype.Being independent is the primary need for visually impaired,hence this device is helpful to achieve that.

Keywords — GPS,Ultrasonicsensing,pulsesensing,navigation

I. INTRODUCTION

A.Motivation:

God gifted sense to human being which is an important aspect in our life is vision. We are able to see the beauty of nature, things which happen in day-to-day life with the help of our eyes. But there are some people who lack this ability of visualizing these things. They face many difficulties to move on with their daily life. The problem gets worse when they move to an unfamiliar location. Visually impaired people face many challenges when moving in unfamiliar public places. Hence a system has to be found to minimize the difficulties of virtually impaired people to reach their destination. Studies indicate that there are approximately 10 to 11 million blind and visually impaired people in North America, and this number is growing at an alarming rate. As many of these people have difficulty knowing where they are or where they are going, frequently feeling totally disorientated or even isolated, supplemental navigational guidance is very important for them. Navigation involves updating one's position and orientation while he or she is travelling an intended route, and in the event the person becomes lost, reorienting and re-establishing a route to the destination.

B.Research:

The blind usually uses the route which are having less obstructions to commute easily.A visually impaired person may depend on feeling of floor surfaces with echo's of footsteps to detect obstacles.our aim is to develop a useful mechanism in navigation system.

Our research is,"Is the Smart stick a replacement to cane stick or the guide dog used by visually impaired persons to navigate?"

Our first research problem starts with the surveying the visually impaired and getting feedback on the existing technology.the feedback that we got has been included in our prototype to satisfy their needs.

Our second research problem mainly focused on cost effective as because most of visually impaired are havig low-income.Hence,it was to incorporate a economical product.

Next our research is to integrate all the components by making effective coding techniques,as we have used Aurdino boards this can be programmed with C.

Our fourth research is the critical part we have faced is to integrate pulse sensig with Global Positioning System,as it was more important to work all modules with synchronization in real-time.By using pulse sensor we have integrated to monitor the health condition of visually impaired and location with messaging services to their family.hence all above problems we have analyzed and provide solution to cater all their needs.

C.Objective:

The paper main objective is to provide a talkative assistance to blind people. We are going to develop a intelligent system that works efficiently good in both indoor and outdoor. Current navigation device for the visually impaired focus on travelling from one location to another. This focuses on designing a device for visually impaired people that help them to travelling independently also it must be comfortable to use. The proposed device is used for guiding individuals who are blind or partially sighted. The device is used to help blind people to move with the same ease and confidence as a sighted people. The device is linked with a GPS to identify thelocation of the blind person. Moreover, it provides the voice alert to avoid obstacles based on ultrasonic sensors. An emergency button is also added to the system. An Aurdinocan be installed into public building and it is also integrated into blind persons walking stick .The whole device is designed to be small and is used in conjunction with the Smart stick.

II. LITERATURE SURVEY

There are several methods and devices used to guide visually impaired persons. Several research works are being performed by many institutions throughout the world to offer the best navigational robot in terms of cost effectiveness. This section gives a brief review on various navigational aids for blind individuals.

Blind and visually impaired people are at a disadvantage when they travel because they do not receive enough information about their location and orientation with respect to traffic and obstacles on the way and things that can easily be seen by people without visual disabilities. The conventional ways of guide dog and long cane only help to avoid obstacles, not to know what they are. Navigation systems usually consist of three parts to help people travel with a greater degree of psychological comfort and independence. Sensing the immediate environment for obstacles and hazards, providing information about location and orientation during travel. Today in the market different technologies like GPS, GPRS, etc are used to navigate visually impaired people. The studies of various published international papers have been done. Before more technologically advanced solutions to mobility aids are discussed it is useful to outline basic properties of the traditionally used primary aids and explain their main properties and limitations.

A.White cane: The most popular mobility hand held aid. It is usually foldable and adjustable to the height of the user. A blind person using swing-like movements, "scan" the path in front in approx. 1 m distance (near -space protection).The cane requires about 100 hours of training for skilful use, e.g. detecting drop-offs, walking up and down the stairs. Advantages: cheap, light-weight constructions available, effectively informs of shorelines, landmarks and obstacles at ground-level, notifies others about visual disability of its user.

1.Disadvantages: does not protect from obstacles at torso and face level

B.Guidance of dog: A specially trained dog assisting the blind in obstacle avoidance, but usually not aiding in way finding (unless travelling a familiar path), e.g. the dog is trained to stop before obstacles, reacts to commands on walking directions. In spite of their great usefulness, guide dogs are a rarely used aid - only about 1% of the visually impaired use it. Most guide dog owners do not simultaneously use the dog and the white cane. Advantages: good in following familiar paths, good overall obstacle avoidance, trained for selective disobedience when sensing danger to his owner. Disadvantages: very costly (training cost approx. $40k in the USA), guide dog service period is on average 6 years, regular dog up-keeping costs and lifestyle changes.

C.Human Guide: A blind person walks hand in hand with a sighted guide. Advantages/disadvantages: The most obvious, but in practice not a permanent solution for aiding the blind in mobility and navigation. A blind person lacks privacy and can have a feeling of being a burden to his or her guide.

III.Block Diagram

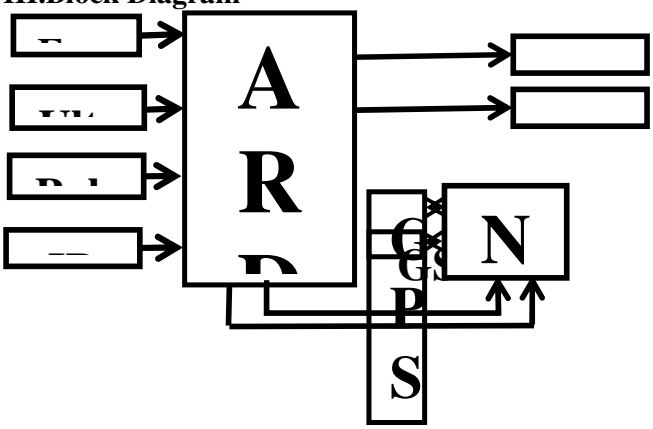

Fig:Block diagram of proposed device

IV.System Components Description:

A. Micro-controller - Our team recognized early on in the research process that we would need a reliable microcontroller. This is primarily the reason for choosing Arduinouno. Arduinouno is the only microcontroller based on ATmega328 .This element is the ―Brain of the prototype and processes all the input and output.

As our prototype has been divided into three models based on the business perspective, we have used two different microcontrollers. For the Gold and Silver models, we have used Arduinouno as it has Wi-Fi capabilities.

B.NodeMCU :

It is an open source IOT platform. It includes firmware which runs on the ESP8266 Wi-Fi SoC from Espressif Systems, and hardware which is based on the ESP-12 module.[The term "NodeMCU" by default refers to the firmware rather than the dev kits. The firmware uses the Lua scripting language. It is based on the eLua project, and built on the Espressif Non-OS SDK for ESP8266. It uses many open source projects, such as lua-cjsonand spiffs.

C. Sonar Sensor - SONAR is the technology we adopted to conduct object detection. For this we used three Ultrasonic Sensors . Three sensors are mounted on the three directions of the stick as right, left and forward. As our surveys indicated the need for sensing low-lying overhead branches, our ultrasound sensor on the cap can help detect the same.

There was an option to select infrared technology as an obstacle detection mechanism. The biggest limitation in this method is that it will not work in all types of lighting condition. The lighting condition has to be good for the objects to get detected. Secondly, the accuracy of detecting an object is higher in the case of an ultrasonic sensor as compared to an infrared sensor. Thus, we opted for ultrasonic sensors.

D. GPS Module - For this element, we are using a Skylab GPS Module MT3329 SKM53. This has ―an embedded GPS antenna and is based on MediaTek3329 single-chip architecture. The GPS is used to give positional information such as latitude and longitude. For this research, we have used the open source Google Maps API to resolve the latitude and longitudinal information. The latitude and longitude information is converted to street addresses for ease of detection by the user.

E. GSM MODEM:GSM (Global System for Mobile communication) is a digital mobile telephony system. With the help of GSM module interfaced, we can send short text messages to the required authorities as per the application. GSM module is provided by SIM uses the mobile service provider and send SMS to the respective authorities as per programmed. This technology enables the system a wireless system with no specified range limits. GSM

uses a variation of time division multiple access (TDMA) and is the most widely used of the three digital wireless telephony technologies (TDMA, GSM, and CDMA). GSM digitizes and compresses data, then sends it down a channel with two other streams of user data, each in its own time slot. It operates at either the 900 MHz or 1800 MHz frequency band.

F. Vibrator– vibrational motors have been used with each of the three sensors. As our survey indicated a preference of haptic feedback, it has been incorporated in the system.

G.Buzzer - To cater to the needs of an auditory feedback, a buzzer has been used to warn the user of any obstacles. As the distance of the object detected decreases, the sound intensity increases.

H.Pulse Sensor -To establish this feature in our prototype, we have used an open source sensor called Pulse Sensor. Its functionality is based on the photodiode technology. The output is measured as beats per minute (bpm). We have created a default threshold window of 80-130 bpm. This threshold has been calculated using the universal heart rate equation:

HRmax = 206.9 – (0.67*age)

The owner has an option of customizing the thresholds through the web-application. If the pulse rate is not in the range of the safe window, an alert will be sent to the emergency care unit of the owner's choice. This element can ensure the health and well-being of the user at all times.

I.Light Sensor – A photo-resistor Light Dependent Resistor (LDR) light sensing module which is sensitive to ambient light intensity has been used. This module has configurable thresholds where if the light intensity drops down it reflects a low output and vice-versa. This element will primarily be used by users with low night vision. The Light Emitting Diodes(LEDs) can enhance the user's vision. This feature can also help alert cars and other pedestrians of the device's wearer.

J. Emergency Button – This is also called the Panic Button. If the owner pushes this button, an alert is send to a pre-assigned user of the owner's choice. This alert is sent via an email and phone call. The user has an option to assign 911 as one of its emergency contacts.

K.Power Source – Currently, a 5V lithium ion battery has been used as a power source.

V.System Analysis:

Aurdino Uno is the heart of the device.Ultrasonic sensor is used for obstacle avoidance.Ultra sonic sensors generates high sound waves and evaluate the echo which is received back by the sensor and it plays a key role to produce the output. Here by connecting all the three sensors to three different directions like left,right and front. These sensors will beeps (or) vibrates .when the obstacle detects at left side it vibrates once ,if it detects in right side it vibrates twice and if it detects in front side it vibrates thrice.It also measures the distance between the obstacle and the victim by using CAYENNE software as the feedback to the processor.If there is no obstacle in all the directions the entire system remains constant (or) unchanged.It also gives buzzer in addition to vibration.Here peak level accuracy is upto "100 cm"

Next ,IR sensor is used for did detection and staircase detection.Here we give two ways of input to detect the obstacles i.e., in the form of both the sensors like ultrasonic and IR sensor which is going to produce the output in two ways like sound and vibration.

The purpose of push button is used to help them at the time of any danger,if the victim ON's the switch ,with the help of GPS module,it send SMS to the family person by using GSM module and messaging services otherwise we have included pulse sensor if health of the victim becomes abnormal also it will send the message.The GSM and GPS modules are operated by NODEMCU.

VI.Output:

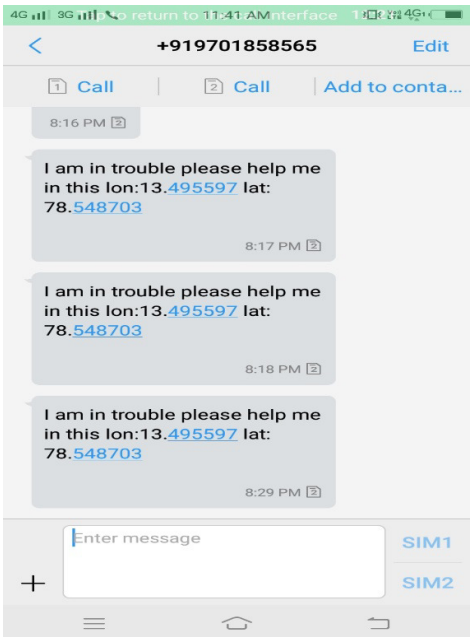

Fig:message to family if victim pressed the button

VI. CONCLUSION

An attempt has been made to make a compact and portable device which is exclusively designed for visually impaired people. It will allow the visually impaired person to travel through an unfamiliar environment with ease. It can be said that the project provides Silicon Eye for visually impaired people. The design and architecture of a new concept of Smart Electronic Travel Aid Stick for blind people. The advantage of the system lies in the fact that it can prove to be a very low cost solution to millions of blind persons worldwide. The proposed combination of various working units makes a real-time system that monitors position of the user and provides dual feedback making navigation more safe and secure. This system is intended to provide overall measures object detection and real-time assistance via Global Positioning System (GPS).The system consist of ultrasonic sensor, sonar sensors, GPS Module, GSM Module and vibratory circuit (speakers or head phones). When the object is detected near to the blinds stick it alerts them with the help of vibratory circuit (speakers or head phones). The location of the blind is found using Global System for Mobile communications (GSM) and Global Position System.

VII.FUTURE SCOPE:

The addition of voice module to the device gives the directions to the victim to required destination.Voice module with access to the GPS module it navigate the person by using the speaker.So interfacing the GPS and voice module we will help them to reach their destination safely and early.

REFERENCES

1) *Amutha B, Ponnavaiko M, —VIRTUAL EYE — THE BLIND CHILD NAVIGATION MODEL USING WIRELESS SENSOR NETWORK‖, International Journal of Information Acquisition, Vol: 07, Issue: 04, December 1 2010, Available: 0www.worldscientific.com.libraries.colorado.edu (Atypon)*
2) *Kanamaru Y, Suzuki H, Asahi K, Wantanabe A, —Proposal for a wireless sensor network visualization system using location estimation technology‖, 2014 Seventh International Conference on Mobile Computing and Ubiquitous Networking (ICMU), January 2014, Available: http://0www.engineeringvillage.com.libraries.colorado.edu/sea rch/results/quick.url?CID=quickSearchCitationFormat&database=3&SEARCHID=Mb405b281487a278e37M7f2c1017816329&intialSearch=true&showpatentshelp=false*
3) *Helal A, Moore S, Ramachandran B, —Drishti: an integrated navigation system for visually impaired and disabled‖, Fifth International Symposium on Wearable Computers, 2001. Proceedings, 09 Oct 2001, Available: http://0ieeexplore.ieee.org.libraries.colorado.edu/xpl/articleD etails.jsp?arnumber=962119*
4) *Visual Impairment and Blindness‖, World Health Organization Media Center, Updated August 2014, Available: http://www.who.int/mediacentre/factsheets/fs282/en/*
5) *Benjamin J. M., Ali N. A., —A laser cane for the blind‖, Proceedings of the San Diego Biomedical Symposium, volume 12, pages 53-57, Available: http://www.rehab.research.va.gov/jour/74/11/2/443.pd f*
6) *K. Ito, M. Okamoto, J. Akita, —CyARM: Haptic Sensing Device for Spatial Localization on Basis of Exploration by Arms‖, Advances in Human-Computer Interaction, Volume 2009 (2009), Article ID 901707, 6 pages, Portland, OR, USA, 2005, Available: http://www.hindawi.com/journals/ahci/2009/901707/*
7) *H. Liu, H. Darabi, P. Banerjee, —Survey of Wireless Indoor Positioning and Systems‖, IEEE transactions on systems, man, and cybernetics—art c: applications and reviews, vol. 37, no. 6, November 2007, Available:*

http://neptune.cp.eng.chula.ac.th/blog/wpcontent/uploads/2013/01/2007-Survey-of-WirelessIndoor-Positioning.pdf

8) *Blindness: Challenge and Achievement‖, World Access for the Blind our Vision is sound, Available: http://www.worldaccessfortheblind.org/node/103*

9) *A. Panuccio, ―A Multimodal Electronic Travel Aid Device‖, ICMI 02: in proceedings of the 4th IEEE International Conference on Multimodal Interfaces, page 39, IEEE Computer society, Washington, DC, USA, 2002, Available: http://www.diegm.uniud.it/fusiello/papers/icmi02.pdf*

10) *Van Erp J.B.F and van Veen, H.A.A.C. (2003)―A Multipurpose Tactile Vest for Astronauts in the International Space Station‖,Proc. Of Eurohaptics 2003, pp 405-408, Available: http://www.eurohaptics.vision.ee.ethz.ch/2003/54.pdf*

11) *A. Gilmore, ―Mobile Robotics I: Lab 5‖, Obstacle Avoidance with Ultrasonic Sensing, CEENBoT™ Mobile Robotics Platform Laboratory Series, Department of Computer & Electronics Engineering, pp 5, USA, Available: http://engineering.unl.edu/downloads/ceen/Robotics_Lab5.pdf*

12) *V.S.M.Madulika, M.S.Madhan Mohan , CH.Sridevi , T.V.Janardhana Rao, ―Arm7 Based Electronic Travel Aid System for Blind People Navigation and Monitoring‖, International Journal of Research in Computer and Communication Technology, Vol 2, Issue 12, December-2013 Available : http://www.ijrcct.org/index.php/ojs/article/view/485*

13) *H. Yoshiaki, S. Yusuke, S. Yuriko, Y. Kenji, ―Development of the navigation system for the visually impaired by using white cane‖, Annual International Conference of IEEE Engineering in Medicine and Biology Science, ISSN: 1557-170X, Available: http://0search.proquest.com.libraries.colorado.edu/docview/6 8359202/EB125A1F31794E47PQ/1?accountid=14503*

14) *J. Loomis, R. Golledge,, R. Klatsky, ―GPS-Based Navigation System for Visually Impaired‖, Engineering and Environmental Psychology, pg. 429446, Feb 14th, 2001, Lawrence Erlbaum Associates Publishers (Mahwah, NJ, US), Available: http://0search.proquest.com.libraries.colorado.edu/docview/6 19673227/EB125A1F31794E47PQ/6?accountid=1450 3*

15) *A. Smeaton, J. Lanagan, B. Caulfield, ―Combining wearable sensor for location-free monitoring of gait in older people‖, Journal of Ambient Intelligence and Smart Environment, pg. 335-346, May 1st , 2013, Available:http://0*

16) *McCann, D. Bryson, ―Smart Clothes and Wearable Technology‖, Pg. 294, ISBN: 978-1-84569-357-2, Copyright © 2009 Woodhead Publishing Limited Available: https://books.google.com/books?id=HsikAgAAQBAJ&pg=PA294&lpg=PA294&dq=circuit+stitched+on+clothes?&source=bl&ots=ujDZ2uI8Y2&sig=qGIgRtKPKvKECOCiKHWUIuDh4BE&hl=en&sa=X&ei=WBo1VeWZC4GegwS_wQE&ved=0CFYQ6AEwCg#v=onepage&q=circuit%20stitched%20on%20clothes%3F&f=false*

17) *Skylab GPS Module MT3329 KM53‖, MyArduino.com – Arduino Authorized Distributer, Available: http://www.myduino.com/index.php?route=product/product&product_id=367*

18) *Beyond Sight‖, Colorado's exclusive dealer for enhanced vision, Available: http://www.beyondsight.com/index-shopping.php*

19) *PING))) Ultrasonic Distance Sensor‖, Parallax Inc – Equip your Genius, Available: https://www.parallax.com/product/28015*