RESEARCH ARTICLE OPEN ACCESS

SMART CAR PARKING INFORMATION SYSTEM

B. Abdul Raheem[1], B.Anitha[2], S.Bharath kumar[3],S.Khadeer suhail[4]
[1] Professor , Department of ECE, AITS, Rajampet,
[2,3,4] Student, Department of ECE, AITS, Rajampet.
Email: abraheem@rediffmail.com[1] , anithabhumireddy@gmail.com[2], bharathkumar9494@gmail.com[3]
suhailkhadeer86@gmail.com.[4]

Abstract:

With the increase in vehicle production and its usage , more and more parking spaces and facilities are required. As the cost is affordable now, most of the people are owning cars and the main problem is the parking in shopping malls and the market places. For parking, searching a suitable place has become a cumber some job and lot of time is wasted for checking each and every gap whether our car can sufficiently be parked in that particular place. To easy the problem, an electronic device is designed which is used to detect the empty space by scanning in the parking area nearby suggesting the availability of parking slot.In this paper a new parking information system called Smart Parking Information System is proposed to assist drivers to find vacant spaces in a car park in a shorter time. The new system uses infrared sensors to detect car park occupancy.

Keywords: Parking , Infrared sensors , microcontroller.

1. INTRODUCTION

Time and cost are two important factors of human life, whether for an individual or a business. As quality of life increases, more and more people inhabit cities. Urban life requires centralized public facilities. Shopping complexes are an important point of interest both for a city's inhabitants as well as for visitors. With the emergence of modern shopping complexes which provide a variety of services, more and more people are attracted to visit them. Hence, more shop owners prefer to locate their business in shopping complexes to target more customers and increase revenue.

Recently, shopping complexes have begun providing services much more diverse than just pure selling and buying. Customers can use banking services, post offices, food courts, cinemas; children's play areas, and so on. The growth of shopping malls has

influenced shopping culture and behaviour. For instance, in metropolitan cities window-shopping or visiting shopping complexes simply for looking rather than buying, is a common activity.

Providing sufficient parking for visitors is one of the main issues in developing shopping complexes. Offering safe and secure parking lots with a sufficient number of spaces and paying attention to handicapped drivers are a few of the factors which can increase customer loyalty and attract customers to visit a shopping mall more frequently. Among the various types of parking lots is multilevel parking, roadside, roadside with ticket and barrier gate and roadside with parking meter; of these, the multilevel parking lot is the most preferred by patrons. Safety, weather conditions, proximity and car park fees respectively are the main factors by which patrons choose a specific parking lot. Hence, multilevel parking lots are preferred, and for this reason it was selected as the parking lot type for this study. Smart car parking system detects car park occupancy through infrared sensors which are located above each parking space. Vacant, occupied, handicapped or reserved spaces are indicated by different colours of LED's. Improper parking is the situation in which one car is parked straddling two vacant spaces and occupies both. Detection of improper packing and providing directions to vacant spaces are other services offered by smart car parking system.

The objectives of this study are to highlight parking lot's importance, indicate the difficulty drivers have in parking their vehicles at shopping complexes, propose an applicable solution to solve the above mentioned problems, and outline an smart car parking system architecture design.

2. EXISTING SYSTEM

The existing system just consists of the parking place, but it does not give any information about the slots available for parking the vehicle. The factors that are affecting the existing system are

2.1.Difficulty in Finding Vacant Spaces Quickly : Finding a vacant space in a multilevel parking slot is difficult and it becomes impossible, especially on weekends or on public holidays.

2.2.Improper Parking : If a car is parked in such a way that it occupies twoparking slots rather than one, this is called improperparking .Improper parking can happen when a driveris not careful about another driver's rights. This istackled by the

development of automated smart carparking system.

3. PROPOSED SYSTEM

In the proposed system, is implemented a new system for the car parking. In this, the information is provided for the drivers about the parking slot vacancy with the help of LCD and LED's. The driver can be able to know whether the slots are empty for parking or not and also he/she can know how many slots are empty and also which slot is empty for parking the car.

The block diagram of the proposed system is shown in Fig 1.

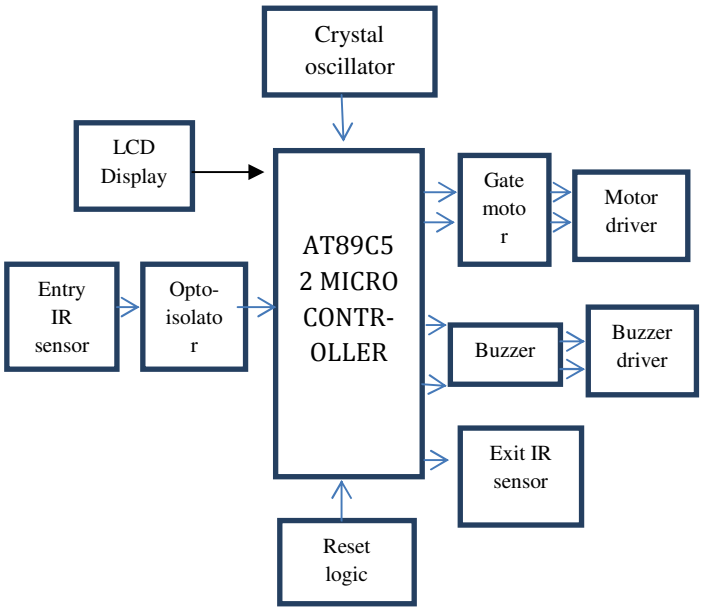

Fig 1:Block diagram of Proposed system

The proposed system consists of a AT89C52 microcontroller, LCD display, IR sensors, crystal oscillator, gate motor, motor driver, opto-isolator, buzzer and buzzer driver.

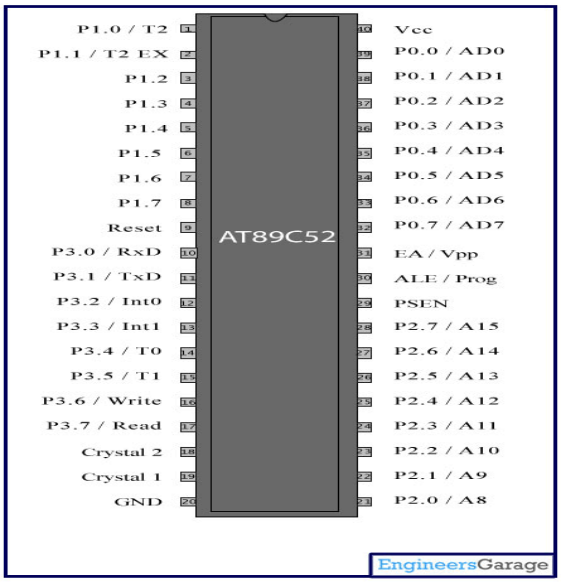

:

Fig 2: AT89C52 Microcontroller

In this work , the control programme is written in microcontroller's, internal 8KB flash for reading the data from sensors, analyzing the situation and to dial and deliver the pre-recorded voice message, simultaneously turning the buzzer ON in case of any unsecure situation. In programming mode it reads the data from user via matrix keyboard. Subsequently stores the information in EEPROM. It displays the dilaed numbers, door opening-closing timings, and the sensor status in display attached to it.

4. THE BASIC FEATURES OF AT89C52 ARE :

- Compatible with MCS-51 products.
- 8K Bytes of in-system reprogrammable flash memory.
- Endurance : 1,000 write/erase cycles.
- Fully static operation : 0Hz to 24MHz.
- Three-level program memory lock.
- 256*8-bit internal RAM.
- 32 programmable I/O lines.
- Three 16-bit timer/counters.
- Eight interrupt sources
- Programmable serial channel

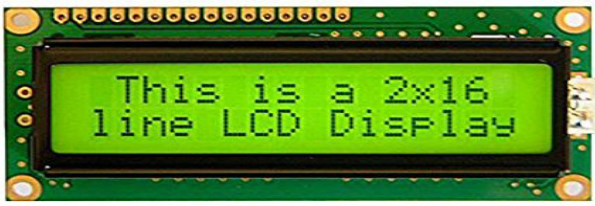

Fig3: LCD Display

This is a 2*16 line LCD display.These are used in electronic meters for displaying the numerical information.It is not possible to display the symbols on this displays. It is a flat panel display, electronic visual display that uses the light modulation properties of liquid crystals. Liquid crystals do not emit light directly. LCDs are available to display arbitrary images or fixed images which can be displayed or hidden, such as preset words, digits, and 7-segment displays as in a digital clock. They use the same basic technology, except that arbitrary images are made up of a large number of small pixels, while other displays have larger elements.

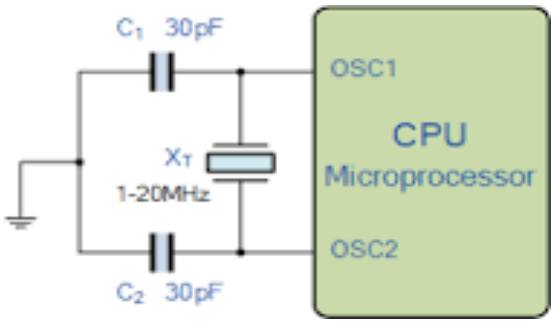

Fig4: Crystal oscillator

XTAL1 and XTAL2 are the input and output, respectively of an inverting amplifier that can be configured for use as an on-chip oscillator. Either a quartz crystal or a ceramic resonator may be used. To drive the device from an external clock source, XTAL2 should be left unconnected while XTAL1 is driven; there are no requirements on the duty cycle of the external clock signal, since the input to the internal clocking circuitry is through a divide-by-two flip-flop, but minimum and maximum voltage high and low specifications must be observed.Crystal oscillator works on the principle of inverse piezoelectric effect.it utilizes the vibrating crystals mechanical resonance,that is made with a piezoelectric

material for generating an electrical signal of a particular frequency. Crystal oscillators have high frequency stability and has very low frequency drift due to change in temperature and other parameters.

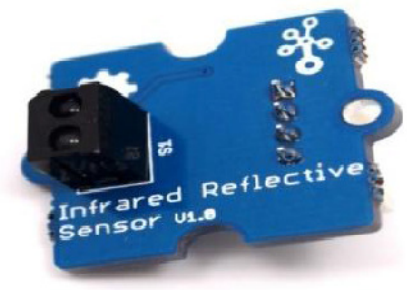

Fig5: IR Reflective Sensor

The reflectivity of infrared light varies with the color and distance of the reflecting surface. According to this principle, Grove - Infrared Reflective Sensor utilizes a RPR220 reflective photo sensor module to detect color and distance. When a light-colored object approaches, the signal intensity received by infrared reflective sensor increases and the indicator LED on board turns red.When a dark-colored object approaches, the intensity decreases and the LED turns off. This sensor is a basic and widely used part in applications such as line-following cars, rotary speed detection, auto data logging on utility meters or other situations where color or distance contrast is sharp.

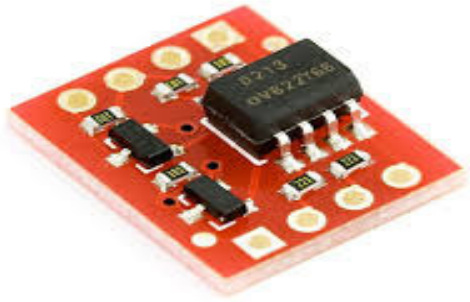

Fig6: Opto isolator

Opto isolator is an electronic device designed to transfer electrical signals with electric isolation between its input and output.The main purpose of using this is to prevent high voltages on one side of the circuit from damaging components or distorting transmission on the other side.

Motor driver is a little current amplifier, its function is to take a low-

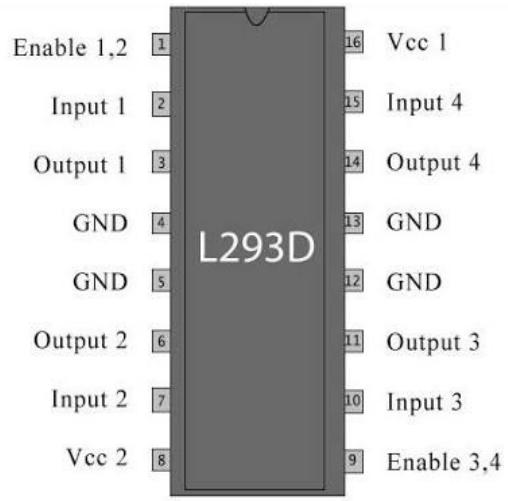

Fig7: L293D motor driver

current control signal and then turn it into a high-current signal that can drive a motor.

Buzzer is an audio signalling device,which may be mechanical,electromechanical or piezoelectric.It is good for drawing attention to condition that requires attention.

Fig8: Gate motor

It is a dual H-bridge motor driver integrated circuit (IC). Motor drivers act as current amplifiers since they take a low-current control signal and provide a higher-current signal. This higher current signal is used to drive the motors.

In its common mode of operation, two DC motors can be driven simultaneously, both in forward and reverse direction. The motor operations of two motors can be controlled by input logic at pins 2 & 7 and 10 & 15. Input logic 00 or 11 will stop the corresponding motor. Logic 01 and 10 will rotate it in clockwise and anticlockwise directions, respectively. Enable pins 1 and 9 (corresponding to the two motors) must be high for motors to start operating. When an enable input is high, the associated driver gets enabled. As a result, the outputs become active and work in phase with their inputs. Similarly, when the enable input is low, that driver is disabled, and their outputs are off and in the high-impedance state.

Fig 9: LED indicators

Light **E**mitting **D**iodes are basically tiny light bulbs that fit easily into an electrical circuit. They can be found in dozens of applications including digital clocks, remote controls, and traffic lights. Unlike ordinary incandescent light bulbs, LEDs do not have a filament that will burn out, so they have a much longer lifetime. LEDs are illuminated by the movement of electrons in a semiconductor material. The composition of the semiconductor affects the wavelength (color) and intensity of the emitted light. LEDs also generate much less heat and a larger percentage of the electrical current is directed toward generating light,

which reduces electrical power usage.

5. WORKING AND OPERATION:

The AT89C52 is a low-power, high-performance CMOS 8-bit microcomputer with 8Kbytes of flash programmable and erasable read only memory. The device is manufactured using ATMEL's high density nonvolatile memory technology and is compatible with the industry standard 80C51 instruction set and pin out.

Whenever a car comes in front of the gate, the IR signal gets disturbed and the microcontroller will open the gate by rotating the stepper motor. The gate will be closed only after the car leaves the second IR pair since the microcontroller should know whether the car left the gate or not. Now the microcontroller decrements the value of the count and displays it on LCD.

In this way, the microcontroller decrements the count whenever the car leaves the park and displays it on LCD. If the count reaches '0',i.e. if the park is completely filled, the microcontroller will display "NO SPACE FOR PARKING" on LCD. And now if any vehicle tries to enter the park, the gate will not be opened since there is no space. If any vehicle leaves the park, the controller will increment the count and allows the other vehicles for parking. It will be programmed by using Keil software. After programming, the code file will be dumped on to the microcontroller board. Finally the output will be displayed on LCD display.

5.1.Algorithm :

Step-1 : Start

Step-2 : Connect power supply to all components

Step-3 : If sensor detects the car ,then it sends a signal to microcontroller.

Step-4 : If the parking slot is empty ,then the microcontroller indicates the place/slot.

Step-5 : The gate is opened, allowing the car to park in the available slot.

Step-6 : Otherwise, displays Parking Full and the gate is not opened for parking.

5.2.Flow chart :

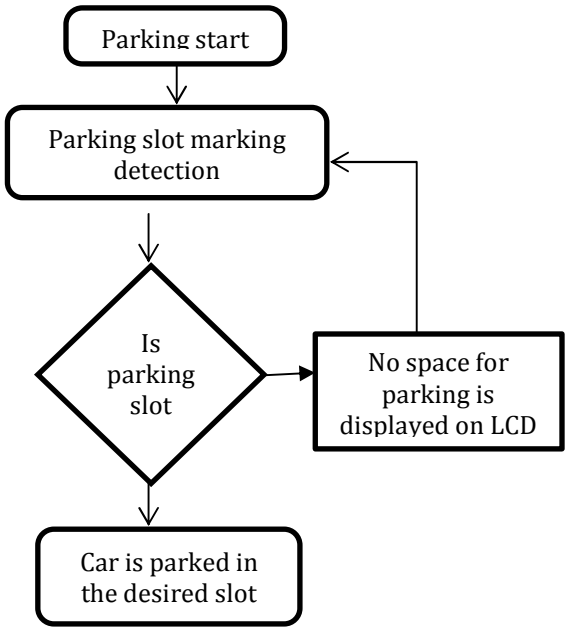

6. Experimental results :

Fig 10: Parking area

The above figure shows the circuit connection of the smart car parking information system. LCD display is interfaced with port 2 of the AT89C52 microcontroller. Port 1 is used by the IR sensors and port 0 is used by the motors. Here we use two gate motors. One is used at the entry and the other is used at the exit of the parking place. Two LED's are used for indicating the vacant slot either empty or full. These LED's are connected to the operational amplifier in which it consists of two logic levels; logic high state and logic low state. When it detects any object or obstacle near it, the sends a logic high signal and then red LED will glow and if the obstacle moves away, green LED will glow. Green LED glows when there is an empty slot and red LED glows when there is no slot for the car to park .

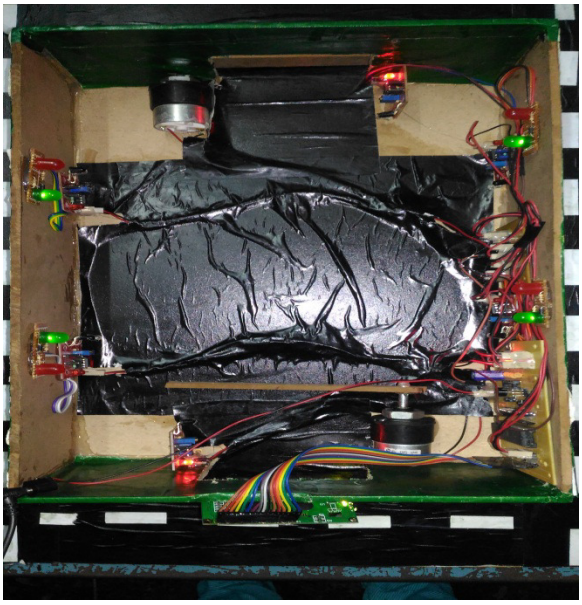

Fig 11: Parking slots are empty

In the above figure, all the slots are empty. When the power supply is on, the LCD starts displaying the number of empty slots in the parking area. If there is no place for the car to park, then it displays that there is no place for parking. Here all the green LED's in the parking slots are glowing because all the slots are empty and so the red LED's are in rest until the car comes and occupy the slot. Green LED's indicates the empty slots for parking and red LED's indicates that the parking slot is occupied.

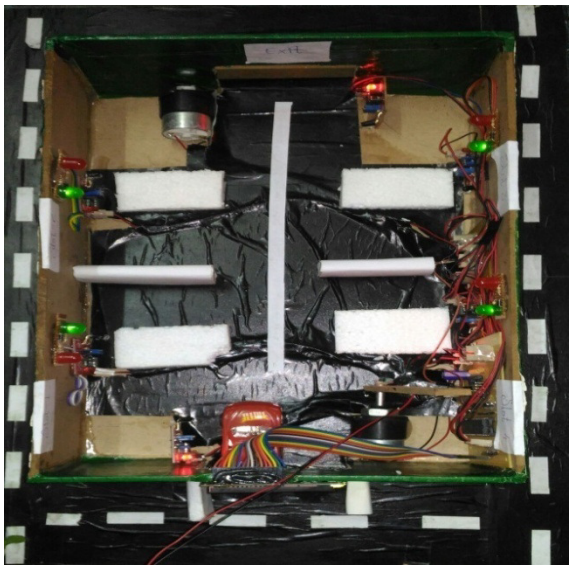

Fig 12: Space provided for parking

In the above figure, the car has reached the parking area. When it came in front of the parking area, the driver can have the information of the vacant slots in the LCD display. If there are empty slots, he can proceed into the parking area otherwise he can't enter it.

When the car is in front of the parking area, the IR sensor gets disturbed and it sends the signal through microcontroller to the gate motor. Then it is rotated and the gate is opened. Then the car enters the parking area and the gate will be closed and can check where the slot is empty for the car to park by using LED's. After the car is parked, then the red LED starts glowing in that particular slot and the count of number of cars in the display will be decremented by 1.

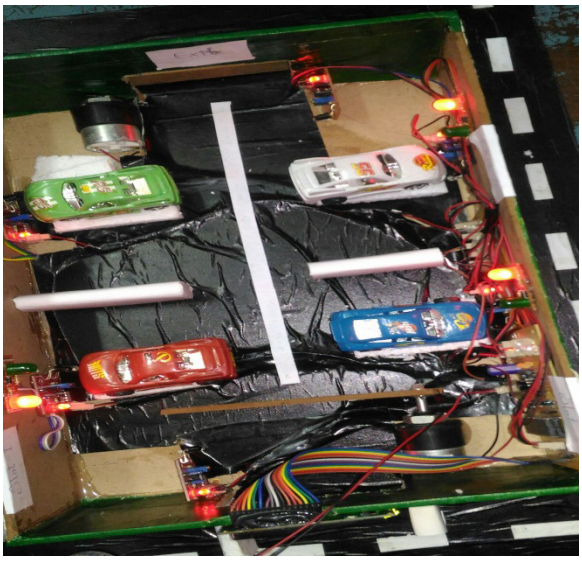

Fig 13: Parking slots are full

In the above figure, all the empty slots in the parking area are occupied and there are no more slots for the car to park. Hence it displays that there is no space for parking in the LCD display and the count will be 0. Even if the car tries to enter the parking area, the gate doesn't opens. The car is allowed into the parking area only if there is any empty slot for the car to park, otherwise the gate is closed and it doesn't opens

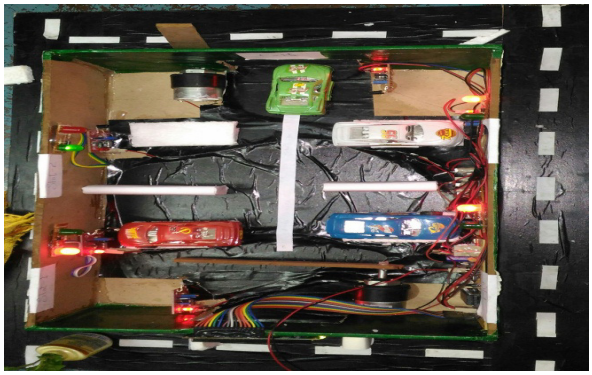

Fig 14: The car Exits from the gate

In the above figure, the car is ready to exit the parking area. When it reaches the exit gate, the IR sensor detects the car and it rotates the motor by passing a signal to the microcontroller and the gate will be opened. Then the car can leave the parking area. The slot from which the car has left the slot, red LED will rest and green LED starts glowing indicating that the slot was empty. After the car has left the park, the count of the number of empty slots will be incremented in the LCD display.

7. Conclusion :

The main contribution of this study is to introduce the most significant parking problem — i.e., finding an empty space — and propose a solution. Infrared sensors can be used for parking space detection Theproposed architecture for a parking detection system would decrease searching time for vacant spaces and reduce instances of single cars improperly parking across two spaces. Future research might examine car park booking procedures and optimization of sensor usage and also provides security using camera. The mechanical model has been designed and the software as well as the control circuit has been implemented successfully. It demonstrates the working of the planned smart parking information system. The main advantages are space optimization, cost effectiveness and security.

8. References:

1. *A. Kianpisheh, N. Mustaffa, J. M. Y. See and P. Keikhosrokiani, "User Behavioral Intention towards Using Smart Parking System", Proceeding of ICIEIS,* ***(2011)*** *Kuala Lumpur, Malaysia, pp. 732-747.*

2. *D. B. L. Bong, K. C. Ting and K. C. Lai, "Integrated Approach in the Design of Car Park Occupancy Information System (COINS)", IAENG International Journal of Computer Science, IJCS, vol. 35, no. 1,* ***(2008)****.*

3 *.M. Y. I. Idris, E. M. Tamil, N. M. Noor and K. W. Fong, "Parking Guidance System Utilizing Wireless*

4. *W. J. Park, B. S. Kim, D. E. Seo, D. S. Kim, and K. H. Lee, "Parking space detection using ultrasonic sensor in parking assistance system," in Proc. IEEE Intell. Veh.Symp., Jun. 2008, pp. 1039–1044.*

5. *H. Satonaka, M. Okuda, S. Hayasaka, T. Endo, Y. Tanaka, and T. Yoshida, "Development of parking space detection using an ultrasonic ensor," in Proc. 13th World Congr. Intell. Transp. Syst. Serv., Oct. 2006, pp. 1–10.*