RESEARCH ARTICLE OPEN ACCESS

Modeling of solar photovoltaic system for cooking in a restaurant located in remote area in Kolkata city, India

Kamaljyoti Talukdar[1]

1(Mechanical Engineering Department, Bineswar Brahma Engineering College, Kokrajhar, Assam, India)

Abstract:

In this paper electricity generated by solar photovoltaic modules are used for cooking food by using electric stove top cooking (large hotplates) in a restaurant located in remote area in Kolkata city throughout the day and year. For cooking, four electric stove top cooking (large hotplates) are used having power rating of 1100 W each. For this study two months i.e. January and May month is considered. The current generated by solar photovoltaic(SPV) modules during sunshine hours goes to four electric stove top cooking (large hotplates) for cooking and excess current goes to rechargeable battery for storage and is used for cooking during solar deficient hours. It is found that total of 133 SPV modules in parallel and 2 modules in series of Central Electronics Limited Make PM 150 for January and May months in Kolkata city are needed. The amount of charge stored and discharged by battery in the months of January and May are 2518 Ah, 345 Ah and 4078Ah, 345 Ah respectively with battery bank rated capacity of 1845 Ah.

Keywords — Central Electronics Limited Make PM 150, electric stove top cooking (large hotplate), solar photovoltaic(SPV).

I. INTRODUCTION

Nowadays cooking of food is done by LPG (liquefied petroleum gas) cylinders. In village level it is done by burning firewoods or cow dung. Use of LPG cylinders is costly and burning of firewoods and cowdung produces smoke which pollutes the environment. So for cooking if alternate sources are used it can solve the above mentioned problems.

Reference[1] discussed cooking energy dissemination in the country India with an objective of understanding the underlying socioeconomic factors governing the utilization of various fuels/energy carriers in cooking. The diffusion of renewable energy devices was observed to be far below their estimated potential. Policy interventions required for better dissemination of renewable energy based devices were also discussed. In Reference [2] an effort had been made to review the developments that occurred in cooking sector rural areas in Indian context. The work carried out on different cooking fuels and cook stoves had been presented in order to use renewable energy sources and to identify the barriers of their dissemination. The status of cooking sector in India and the initiatives taken by the government of India had also been discussed and presented in the paper. It had been observed that the government of India is running several programs for the promotion of solar and biogas as cooking fuels in rural areas and it had succeeded to an extent. Reference [3] presented the current state and discussed benefits of the biogas technology in Nepal. Improved health, increased crop productivity, saved time for women were some of the major benefits to the users. It provided economic benefit to the country through reduced deforestation and carbon trading. In addition, by reducing green house gas emission, the technology helped in mitigating global warming and climate change. Thus biogas is a renewable, sustainable and clean source of energy that provided multiple benefits; locally and globally. With some exception, cattle dung had been used primarily as an input and

the technology was limited to households only. More systematic and comprehensive study supported by research and development was required to use other degradable waste such as municipal waste to produce biogas on a large scale.

In the present paper, current generated by SPV(solar photovoltaic) modules is used for cooking by four electric stove top cooking (large hotplates) in a restaurant located in remote area in Kolkata city throughout the day and year.

II. SYSTEM LAYOUT

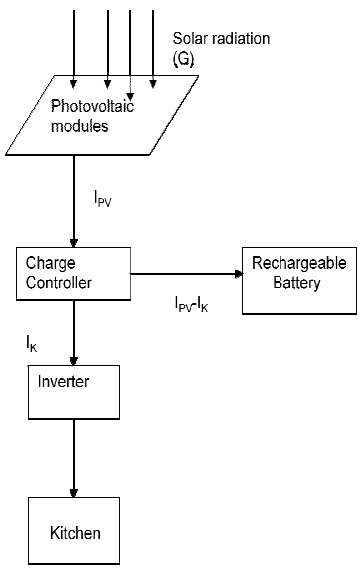

Fig. 1 Schematic view of combined solar photovoltaic system and electric stove top cooking (large hotplate) used by kitchen in restaurant during sunshine hours

In Fig. 1 it shows the schematic view of combined SPV system and current used by four electric stove top cooking (large hotplates) used by kitchen in restaurant during sunshine hours. When solar radiation falls on SPV modules current (I_{PV}) is generated. The current required by kitchen (I_K) goes to kitchen after passing through charge controller and inverter and excess current (I_{PV}-I_K) goes to rechargeable battery for storage and to be used during non-sunshine or solar deficient hours.

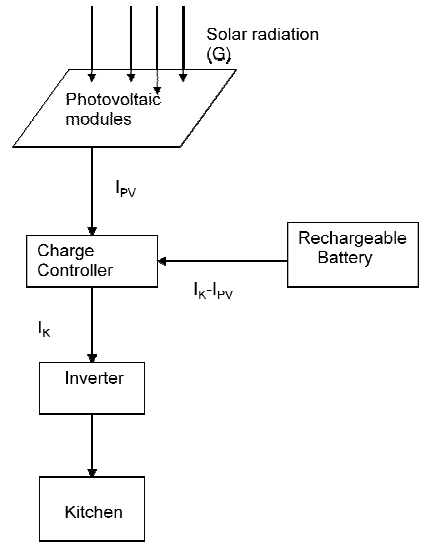

Fig. 2 Schematic view of combined solar photovoltaic system and electric stove top cooking (large hotplate) used by kitchen in restaurant during non sunshine or solar deficient hours.

Fig. 2 shows the schematic view of combined SPV system and current used by four electric stove top cooking (large hotplates) used by kitchen in restaurant during deficient solar radiation. During solar deficient hours remaining current to kitchen (I_K-I_{PV}) comes from rechargeable battery which got stored during sufficient solar radiation hours.

III. MODELING

A. *Modeling of photovoltaic modules*

The current required for operating four electric stove top cooking (large hotplates) in kitchen is obtained from SPV modules. In the present work Central Electronics Limited Make PM-150[4] SPV module has been used. The single cell terminal current(i_{pv}) is given by [5]:

$$i_{pv} = i_l - i_d \qquad (1)$$

Where i_l is the light current and i_d is the diode current. The solar radiation data, ambient temperature data are obtained from [6] and wind speed data required for calculating light current is obtained from [7]. The other values required are obtained from [4] and [5]. For calculating diode current values are obtained from [4] and [5].

The number of modules required in series (N_s) is given by: $N_s = \dfrac{V_{system}}{V_{module}}$ (2)

Where V_{system} is the system voltage of the photovoltaic array(considered 48 V in present study) and V_{module} is the voltage obtained from single module[4].

The current required from photovoltaic array(i_{spv}) is given by summation of total current required by kitchen in a day: $i_{spv}=I_{K(total)}=(I_K \times 24)$ (3)

The number of photovoltaic modules required in parallel (N_p) is given by: $N_p = \frac{i_{spv}}{i_{mp}}$ (4)

Where i_{mp} is the current available from single module under peak power condition [4].

Net current obtained from solar photovoltaic array(I_{PV}) is given by: $I_{PV} = i_{pv} \times N_p$ (5)

B. ***Modeling of kitchen***

For cooking of food in kitchen of a restaurant four electric stove top cooking (large hotplates) are used and the power rating of each is 1100 W [8].The total power required by four electric stove top cooking (large hotplates)is 4400 W. Hence current required by kitchen after passing through charge controller and inverter is:

$$I_K = \frac{4400 \times 1.25}{48 \times powerfactor \times \eta_{inverter} \times 7 \times \eta_{charge controller}} \quad (6)$$

Where 1.25-derating factor for photovoltaic modules[9], power factor-0.85, $\eta_{inverter}$ -inverter efficiency (0.85), $\eta_{charge controller}$ -charge controller efficiency(0.85)[9], 7-sunshine hours in Kolkata city [10].

IV. CALCULATIONS AND RESULTS

From equation no. 6, I_K is found to be 26.645 A. From equation no.3, i_{spv} is found to be 639.702 A. And number of SPV modules in parallel is given by equation no.4 which is 133 and number of modules in series is given by equation no. 2 which is 2.

Fig.3 and 4 shows the amount of charge discharged and stored in battery for the months of January and May. For storing extra current generated by SPV modules rechargeable battery is used which has an efficiency of 0.9

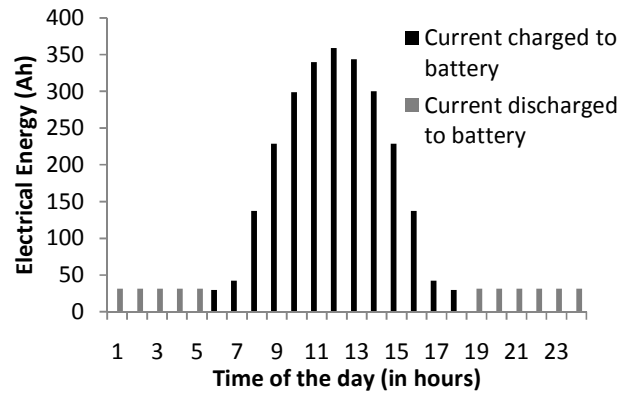

Fig.3 Battery discharge and charging of battery bank for the month of January

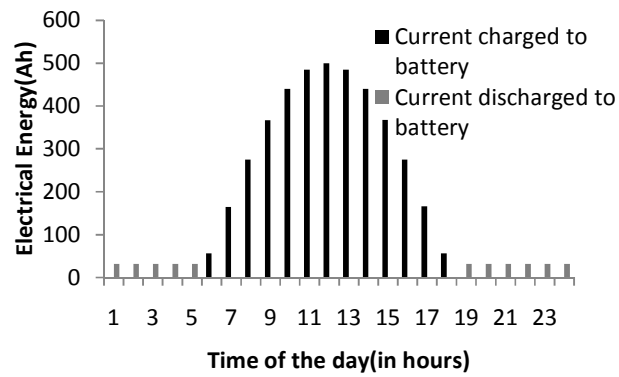

Fig.4 Battery discharge and charging of battery bank for the month of May

Based on Fig. 3 and 4 it is found that amount of charge stored and discharged by battery in the months of January and May are 2518 Ah, 345 Ah and 4078Ah, 345 Ah respectively. The battery bank of rated capacity needed is 1845 Ah.

V. CONCLUSIONS

Based on the above mentioned study it is found that 133 SPV modules in parallel and 2 modules in series of Central Electronics Limited Make PM-150 are required for cooking by four electric stove top cooking (large hotplates) throughout the day and year. Months January and May is considered because January and May months have minimum and maximum solar radiation respectively. Hence,if the combined system shown in Fig. 1 and 2 works well it can work well throughout the day and year. The amount of charge stored and discharged by battery in the months of January and May are 2518 Ah, 345Ah and 4078Ah, 345 Ah respectively with battery bank capacity of 1845 Ah.

REFERENCES

1. *S. D. Pohekar, D. Kumar, and M. Ramachandran, "Dissemination of cooking energy alternatives in India—a review," Renewable and Sustainable Energy Reviews, vol. 9(4), pp.379-393, Aug. 2005.*

2. *M. Bansal, R. P. Saini, and D. K. Khatod, "Development of cooking sector in rural areas in India—A review," Renewable and Sustainable Energy Reviews, vol.17, pp.44-53, Jan. 2013.*

3. *H. Katuwal, and A. K. Bohara, "Biogas: A promising renewable technology and its impact on rural households in Nepal," Renewable and Sustainable Energy Reviews, vol. 13(9), pp.2668-2674, Dec. 2009.*

4. *(2011)Solar photovoltaic modules pm 150. [Online]Available:http:-celindia-co-in.preview1.cp247.net/cal/PM150.pdf*

5. *R. Chenni, M. Makhlouf, T. Kerbache, and A. Bouzid, "A detailed modeling method for photovoltaic cells," Energy, vol. 32, pp. 1724-1730, 2007.*

6. *G. N. Tiwari, Solar energy-Fundamentals, Design, Modeling and Applications, New Delhi: Narosa Publishing House, 2004.*

7. *(2014) Wind speed in Kolkata, West Bengal 700001, India.[Online]Available:http://www.synergyenviron.com/tools/wind_data.asp?loc=Kolkata%2CWest+Bengal%2CIndia*

8. *(2018)Typical power ratings for appliances-Cool Australia.[Online]Available:https://coolaustralia.org/wp-content/uploads/2013/12/Typical-power-ratings-for-appliances.pdf*

9. *(2011) Telecommunication Engineering Centre (TEC), New Delhi, Planning and maintenance guidelines for SPVpower.[Online]Available:http://www.tec.gov.in/guidelines.html*

10. *S. K. Patra, and P.P.Datta.(2009) Some insights into solar photovoltaics-solar home lighting system, NABARD Technical Digest 7.[Online]Available: http://www.nabard.org/*