RESEARCH ARTICLE OPEN ACCESS

Drone Ambulance Support System

P.Anand[1], P.Arjun[2], N.Bharath Kumar[3], K.Gowtham[4]
[1]Assistant Professor
,[2, 3, 4]Student of R.M.K Engineering College

Abstract:

Smart cities essentially require the state-of-the-art technologies that can provide smart service in various aspects, and robotic systems are one of the key solutions for such requirements. The time taken by an ambulance to reach the accident scene depends a lot on the route, distance and the traffic enroute and these ambulance delays have resulted in deaths of thousands of people. We present a prototype of an emergency flying air ambulance or an ambulance drone which can reach the victims faster than a normal ambulance within precious lifesaving minutes and gives real time condition of the victim by measuring different parameters using different sensors. When a call is given to the emergency number, the emergency operator tracks the location and navigate using GPS. The ambulance drone arrives the scene in no time and real time instructions are provided by the operator using various sensors which is connected to the real time world IOT.The details of the design and development of such drone is presented in this paper.

Keywords— **ECG,LM35, ESP8266,Arduino,DCMotor,LCD,Thingspeak.Respiration sensor.**

INTRODUCTION:

On an average, In India or Bangladesh, a driver might actually spend as many as 40 working days per year in traffic. What's worrying is that there is an exponential growth in this figures. Now imagine an emergency requirement of an Ambulance to a place where there is a slow moving traffic or at times, traffic Jam. If the hospital has aerial support via Helicopter and co-incidentally the patient's location has an open space nearby for the helicopter to land, you're in the biggest charm of luck. However, most of the times, this is not the case.

When there is a patient who is in an urgent need of doctor's attention, there are chances that the patient might not survive the time that it takes for an ambulance to reach him. According to a recent article in The Dailymail (UK), thousands die because of the Ambulance delays [2]. The biggest problem is that even if the ambulance goes to a location as close as a couple of miles, it might still take about 15 minutes for it to reach the patient. These 15 minutes can be vital to decide whether or not, the patient will survive. In the emergency cases of Heart Attacks or Asphyxia/Asphyxiation, the patient could easily die in those 15 minutes or potentially drift away from any possibility of saving. This becomes even worse if the distance is more. Effectively enough, the chances of finding traffic Jam or a slow moving traffic also increases dramatically which works like final nail in the coffin in the emergency situations. Thus, what could be done to improve their chances of survival is a debatable subject.

Should people keep those ailments or aids of emergency situations such as the ones mentioned above, at home? Or should we cross our fingers and hope that such an emergency crisis will not come to us.

Asphyxiation is a condition of severely deficient supply of oxygen to the body that arises from abnormal breathing. An example of asphyxia is choking.The fact that the ambulance might take somewhere between 10 to 40 minutes to reach the patient, depending upon the location and traffic, only aggravates the problem. This is where the **Drone Ambulance Support System** might come in handy and reach the patient in a straight line, surpassing all the traffic problems and cutting down the travel time to the patient by as much as 95% in some cases. This increases the chances of survival for the patient till the ambulance arrives, by a prodigious percentage.

BACKGROUND RESEARCH:

The aging population and increasing numbers of patients have presented a huge economic burden on not only themselves, but the government and providers as well.Becauseofthis,therehavebeenmany different healthcare models and methods produced over the years. For example, the homecare model provides patients with certain types of care in their own homes[1].

Video-based treatment (called videoconferencing) is another model that provides two-way video services and voice contact between patients and doctors or patients and their relatives. Using devices with a touch screen, patients can easily consult with doctors or relatives when they need to. This method enables patients who are far from urban areas or centralized hospitals to receive video therapy, recovery support and specialty services. Doctors can collect and share patients' data and information (such as blood pressure and heart rate) to make an accurate and rapid diagnosis with specialists in other areas [2].

Patients living in rural areas have limited or no access to transportation methods or caregivers who are able to deliver or pick up medicine and test kits for them. Recently, some researchers have proposed the use of drones for healthcare services. However, they are not applicable to patients who need routine healthcare services as we consider in this paper. Therefore, a new healthcare model should be developed to ease the burden for patients with chronic diseases living in rural areas [3].

Many drone applications involve surveillance using an on board camera. However, drones also are capable of carrying devices other than cameras and capable of delivering small loads. Drones have been used extensively by the military in combat and for humanitarian aid. Useful non-military drone applications in different industries include agriculture surveillance and crop spraying, shark surveillance at beaches, monitoring wildlife for conservation, monitoring fires, scientific research and exploration, monitoring riots and international borders by police and governments, sports and entertainment event

coverage, other media coverage, emergency services and disaster response [4].

Arguably, humanitarian drone applications are the most useful since human lives are at stake. For example, in Nepal after the 2015 earthquake, drones helped rescuers locate survivors [5].

Regulatory bodies, such as the Federal Aviation Administration (FAA), usually ban commercial drones because they are wary of collisions in airline air space. Nevertheless, there have been reports of hundreds of collision close calls many due to non- commercial drones [6].

The main challenges for the healthcare domain of smart cities are using ICT and remote assistance to preventand diagnose diseases, anddeliver the healthcare service in addition to providing all citizens with access to an efficient healthcare system characterized by adequate facilities and services [7].

TheInternetofThingsrevolutionisredesigning modern healthcare with promising technological, economic, and social prospects [8].

PROPOSED SYSTEM:

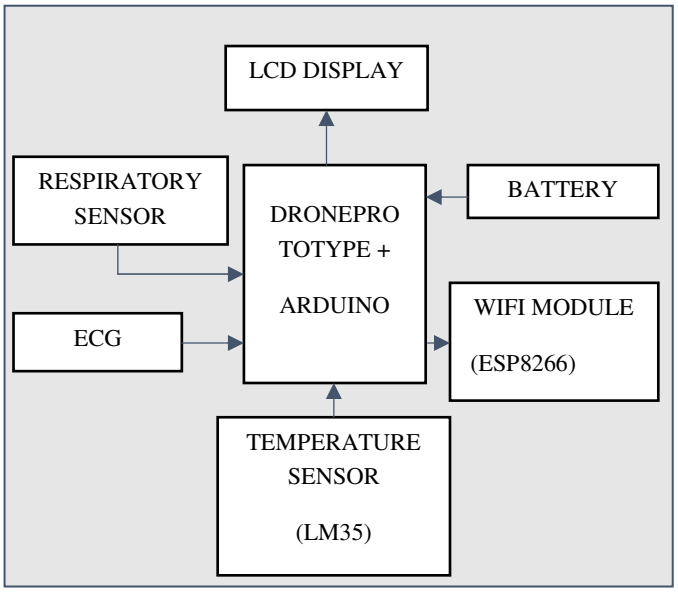

A.BLOCK DIAGRAM

FIG: 1.1DRONE AMBULANCE SUPPORT SYSTEM

The above figure clearly depicts the prototype of the system. The arduino and the DC motors are being supplied in by a 12V lithium battery. When a request for medical drone or when a medical emergency is raised by the user by dialing. The pilot (operator) will locate the user. He then trace the route to reach the spot, out of various algorithm routes, the pilot will opt for the shortest route. The pilot then feeds the location to the drone or connect it via IOT by providing latitude and longitude. The drone ambulance will then starts it service. It then reaches the spot where the aid is needed. The proposed drone will be equipped withLM35, ESP8266, Respiratory sensor, ECG. The drone is facilitated with a camera which will live telecast the condition of the victim to the doctors. The camera will also assist by

providing videos of medical emergency to be performed in case of emergency. It will calculate the real time values of temperature, respiration level, ECG and transfer the same to the medical practitioner with the help of IOT.

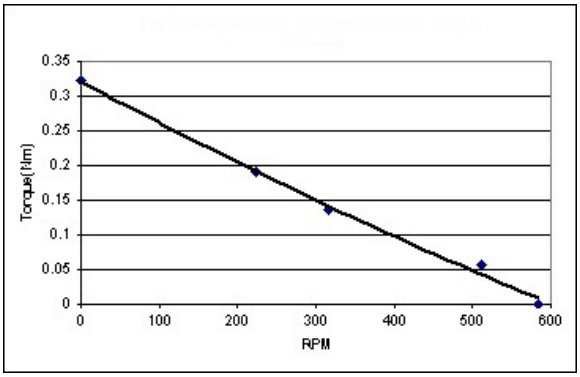

FIG.2. TORQUE-SPEED CHARACTERISTICS OF A DC MOTOR

OPERATION OF DRONE:

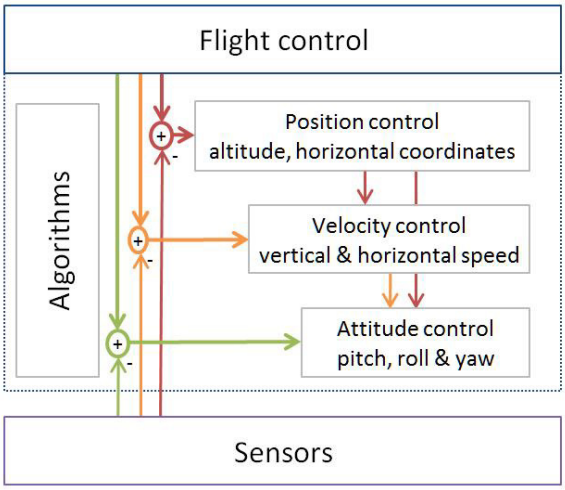

FIG.3: DRONE ALGORITHM

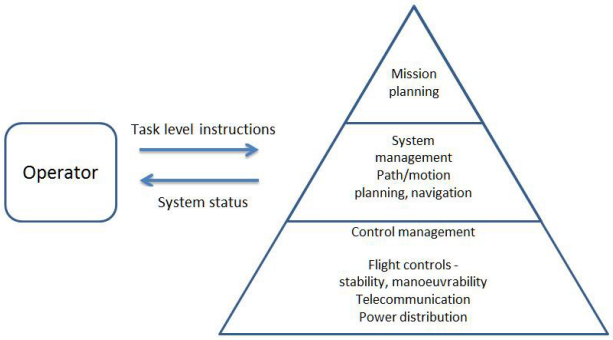

FIG.4: DRONE INSTRUCTION ALGORITHM

ESP8266 – WIFI MODULE

The ESP8266 is a Wi-Fi module which consists of a chip integrated with the TCP/IP protocol stack for its operation. This helps the microcontroller to gain access to any Wi-Fi network. It either hosts an application or offloads all the existing Wi-Fi network functions available from another application processor. Each module has a set of pre-programmed AT command so that we can integrate this to the Arduino device and get access to the Wi-Fi. The ESP8266 module is not costly and it is a user-friendly board.

LM35_TEMPERATURE SENSOR

The LM35 series are precision integrated-circuit temperature sensors, whose output voltage is linearly proportional to the Celsius (Centigrade) temperature. Low cost is assured by trimming and calibration at the wafer level. The LM35's low output impedance, linear output, and precise inherent calibration make interfacing to readout or control circuitry especially easy. It can be used with single power supplies, or with plus and minus supplies. As it draws only 60 µA from its supply, it has very low self-heating, less than 0.1˚C in still air. The LM35 is rated to operate over a −55˚ to +150˚C temperature range, while the LM35C is rated for a −40˚ to +110˚C range (−10˚ with improved accuracy).

THINGSPEAK:

ThingSpeak is an open source Internet of Things (IOT) application and API to store and retrieve data from things using the HTTP protocol over the Internet or via a Local Area Network. ThingSpeak enables the creation of sensor logging applications, location tracking applications, and a social network of things with status updates.

CONCLUSION:

This paper aimed to provide a feedback regarding the degree of practicality for the existence of DASS in natural environment. The comparison to regular ambulance and how it can be useful in support of those ambulance rather than replacing them was another aspect taken into consideration. Clearly, it was evident that many lives suffer because their urgent need of support from ambulance wasn't met because of ambulance delays. Obviously, we can't ensure that the ambulance will reach them faster, so we thought of rather supporting the patient long enough to cover for ambulance delays by using the Drone.

REFERENCES:

[1].Omachonu, V.K., Einspruch, N.G.: Innovation in health- care delivery systems: A conceptual framework. Innov. J.: Public Sect. Innov. J. 15(1), 1–20 (2010).

[2].Molfenter, T., Boyle, M., Holloway, D., Zwick, J.: Trends in telemedicine use in addiction treatment. Addict. Sci. Clin. Pract. 10(1), 14 (2015).

[3].Todd, C., Watfa, M., El Mouden, Y., Sahir, S., Ali, A., Niavarani, A., Lutfi, A., Copiaco, A., Agarwal, V., Afsari, K., etal: A proposed UAV for indoor patient care. Technology and Health Care (Preprint), pp. 1–8 (2015).

[4].R. Clarke, "Understanding the drone epidemic", Computer Law & Security Review, 30 (2014), pp. 230-246.

[5].A. Choi-Fitzpatrick, D. Chavarria, E. Cychosz, J. P. Dingens, M. Duffey, K. Koebel, S. Siriphanh, M. Yurika Tulen, H. Watanabe, T. Juskauskas, J. Holland and L. Almquist, Up in the Air: A Global Estimate of Non-Violent Drone Use 2009-2015, Joan B. Kroc School of Peace Studies at Digital@USanDiego, University of SanDiego, 2016.

[6].D. Esler, Drone Revolution, Business & Commercial Aviation, 2015.

[7]. P. Neirotti, A. De Marco, A. C. Cagliano, G. Mangano, and F. Scorrano, ‘‘Current trends in Smart City initiatives: Some stylized facts,’’ Cities, vol. 38, pp. 25–36, Jun. 2014.

[8]. S. M. Riazul Islam, D. Kwak, M. Humaun Kabir, M. Hossain, and K.-S. Kwak, ‘‘The Internet of Things for health care: A comprehensive survey,’’ IEEE Access, vol. 3, pp. 678–708, Jun. 2015.