RESEARCH ARTICLE OPEN ACCESS

Wifi Based Surveillance Robotic car UsingRaspberry Pi

[1]Kulpreet Kaur Siledar,[2]Amit M. Rawate
[1](*CSMSS Ch. Shahu College of Engineering, Aurangabad, India)*
[2](Associate Professor & Head of Department, *CSMSS Ch. Shahu College of Engineering*, *Aurangabad, India)*

Abstract:

Video surveillance is the process of monitoring a situation, an area or a person. This generally occurs in a military scenario where surveillance of borderlines and enemy territory is essential to a country's safety. Human surveillance is achieved by deploying personnel near sensitive areas in order to constantly monitor for changes. But humans do have their limitations, and deployment in inaccessible places is not always possible. There are also added risks of losing personnel in the event of getting caught by the enemy. With advances in technology over the years, it is possible to remotely monitor areas of importance by using robots in place of humans.In this project we use the linux based capabilities to transmit video from USB camera through internet and control the robot movement accordingly.

Keywords — **Raspberry pi, USB camera ,wifi, Motor Driver, Robotic Chassis.**

I. INTRODUCTION

An embedded web server creates an easy way for monitoring & controlling any device which is at remote place. For designing the system we require remote pc along with the internet facility at the remote locations. If we don't have internet connectivity still we can use the unit using Wi-Fi. We implement a system which is portable, low cost & having less maintenance. The reporting of this real-time data corresponding to the process plants is therefore be of great use for future analysis.

Developing surveillance and monitoringsystems can be quite challenging at times, since the systems should be designed with consideration of the environment to be monitored. Good surveillance systems need to have dynamic features, e.g. monitoring cameras. Monitoring such a large area would also be a challenge for the security officers, as they will need to spend too much time to patrol covering all places. To address the challenges like surveillance of a large building with many levels, which would insure a high cost to install many cameras at many places dynamic surveillance systems include dangerous areas.

Human surveillance is achieved by deploying personnel near sensitive areas in order to constantly monitor for changes. But humans do have their limitations, and deployment in inaccessible places is not always possible. There are also added risks of losing personnel in the event of getting caught by the enemy. With advances in technology over the years, it is possible to remotely monitor areas of importance by using robots in place of humans.Robots are being used in variety of industrial applications for various activities like pick and place, painting, assembling of subsystems and in hazardous places for material handling etc.

Robots are becoming more and more advanced as technology increment in the areas of CPU speed, sensors, memories etc.

And there is ever demanding applications even in defense. With the rapid growth of the Internet, more and more advanced devices or sensors have been embedded into it for performing the desired work, distributed computer systems, surveillance cameras, telescopes and manipulators. Although the implementation of Internet robotics or web- based robotics is relatively new and still in its early stage, it has gathered the huge interest of many researchers in the world.

II. SYSTEM DESIGN AND IMPLEMENTATION

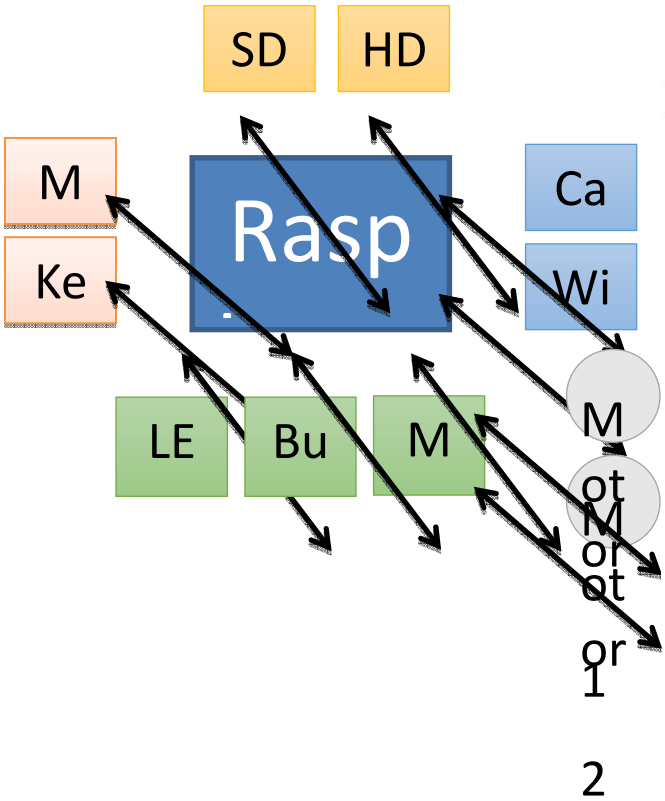

Figure 1: Proposed System

The proposed system consists of a robotic unit. The robotic unit is consisting of the webcam, Wi-Fi dongle and the heart of the project, raspberry pi along with the PCB containingmotor driven IC and voltage regulator circuitry.The brain of the circuit is Raspberry pi. Raspberry pi is used to control and monitor the robotic unit.

A webcam is connected to one of its USB ports. A Wi-Fi dongle is provided so as raspberry can communicate over Wi-Fi. Internet can be provided to the raspberry through this. It has a web camera mounted over it, through which we will get live video feed and the interesting part here is that we can control and move this robot from a web browser over the internet.

In this project we use the linux based capabilities to transmit video from USB camera through internet and control the robot movement accordingly. We will be using web browser in our PC/laptop/mobile to enter a web address of raspberry pi, where we can see the video of robot and buttons, which if pressed, will move robot in forward/reverse/left/right direction.

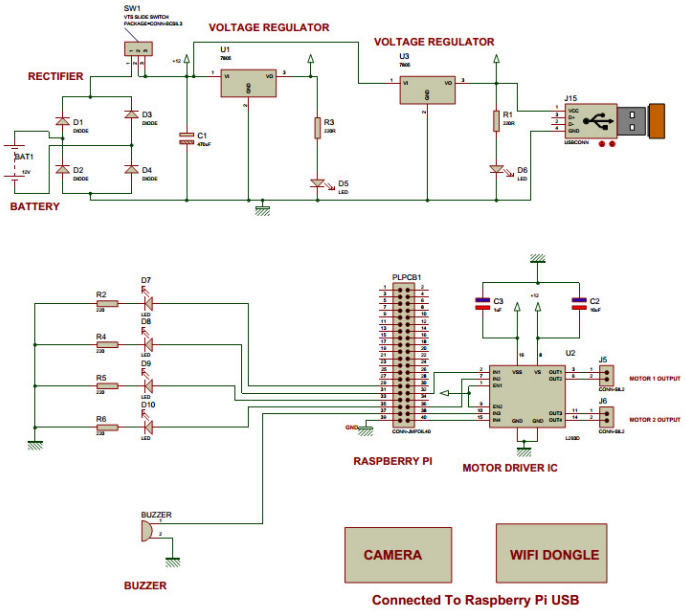

A. Software implementation

The raspberry pi's rasbian operating system is preloaded with the GCC compiler suite. This GCC compiler is not needed to be installed separately and hence raspberry pi directly run C programs without installing anything extra. But the embedded coding requires access to the Raspberry Pi GPIO's and for that sake; it's a must to install additional libraries. The Raspberry Pi Foundation recommends Python as a language for learners. Any language which will compile for ARMv6 can be used with the Raspberry Pi, though; so you are not limited to using Python. C, C++, Java, Scratch, and Ruby all come installed by default on the Raspberry Pi.

Python is considered to be the simplest of all programming languages by many. This is the reason why many people prefer using python on the raspberry pi. As python was being preferred by the raspberry pi foundation itself, later on, it happened so that many people who wanted to write device drivers, firmware and sample codes for various GPIO interfaces to raspberry pi, began naturally to write all these things in python only. This leads to a wave of programming stuffs and material being done in python.

Software design is divided into 4 codes namely: Webcam Server is the code run in the Raspberry Pi to capture the images and stream them over the internet. Here the images will be compressed into .jpg format to reduce their size prior to their transmission over the internet. They are sent using byte array over the UDP soccer.Webcam Client is run by the user to receive this

images in the form of byte array. They are then displayed on the monitor at a rate closer to 5 images per second so that they appear like a continuous video.

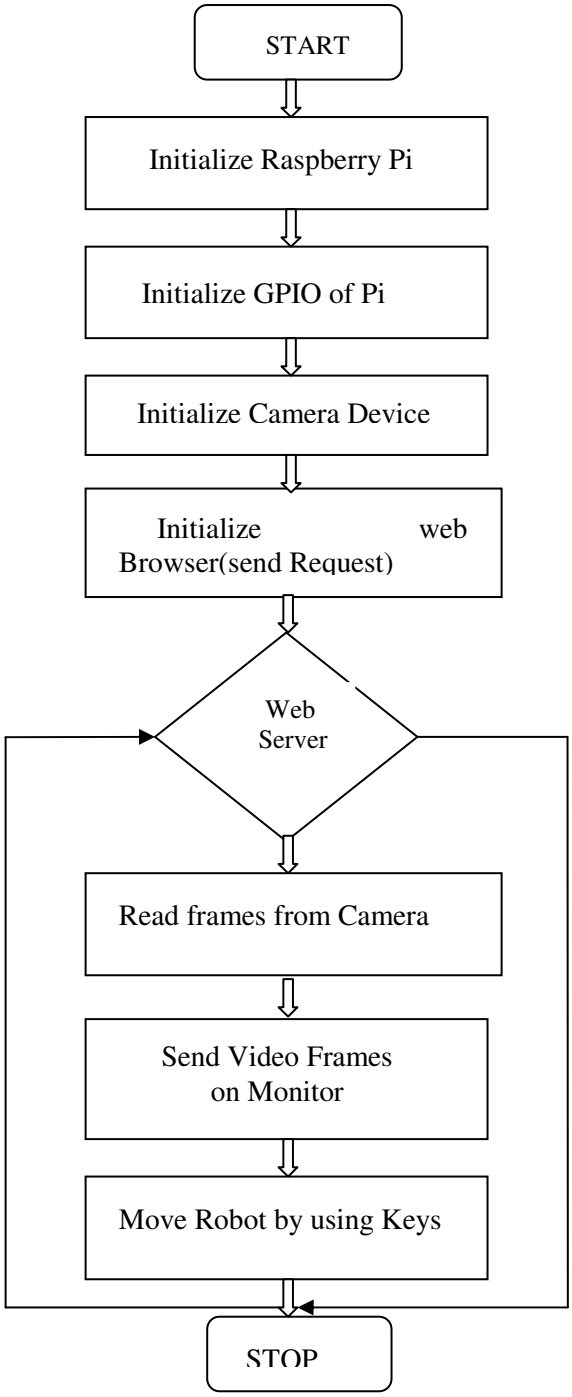

Figure 3: Flowchart showing system operation

Figure 3 shows the flow chart of the algorithm implemented for this.Motor Server is run by the user. Monitoring the video, the user maneuvers the robotic vehicle or the robotic arm accordingly. This is done by accepting input either from the keyboard or the webpage. It is done by checking the key press events.Motor Client as per the input from the user, either the robotic vehicle or the robotic arm move. This is done by making High or Low the desired GPIO pins of the Raspberry Pi. 4 GPIO pins are connected to the 4 servo motors and 4 to the motor driver IC l298N.

B. Hardware Implementation

Hardware consists of Raspberry Pi3, Motor Driver, USB Camera.

1. Raspberry Pi 3

The Raspberry Pi 3 Model B is the third generation Raspberry Pi. This powerful credit-card sized single board computer can be used for many applications and supersedes the original Raspberry Pi Model B+ and Raspberry Pi 2 Model B. Raspberry Pi 3 Model B brings you a more powerful processor, 10x faster than the first generation Raspberry Pi. Additionally it adds wireless LAN & Bluetooth connectivity making it the ideal solution for powerful connected designs.

Raspberry Pi is used for making robot wireless and web based.ge Raspberry Pi and then the videos are transmitted wirelessly from the robot to the user's monitor, from where the user can conveniently control the robotic vehicle's movement and also the robotic arm movement.Raspberry pi is connected with the dongle which enables raspberry pi to transmit over the web network. Raspberry-Pi Module Raspberry Pi uses an SD card for booting and for memory as it doesn't have an inbuilt hard disk for storage.

We use python or embedded C to write code into the raspberry pi. It has a strong processing capability due to the ARM11 architecture and Linux-based system. In terms of interface and control, it has 1 SPI, 1 UART, 1 I2C and 8 GPIO, which basically meet the control requirement. There are easy to use open source peripheral driver libraries.

2. Motor Driver L298N

The L298N H-bridge module can be used with motors which have a voltage range of between 5 and 35V DC. With the help of L298N H-bridge module, it is quite easy to control one or two DC motors. First, connect each motor to the A and B connections on the L298N module. Ensure that the polarity of the motors is the

same on both inputs if you are using two motors for a robot or anything. Otherwise, you may need to exchange them over when both motors are set to forward and one goes backward.

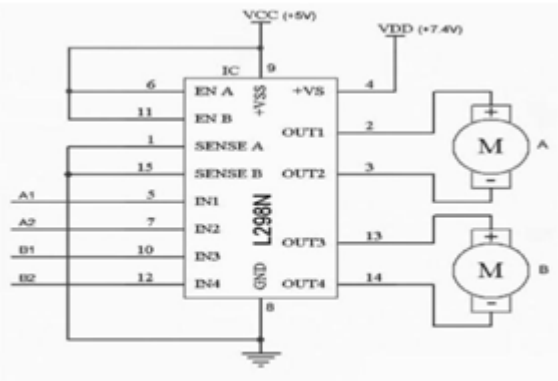

Figure 4: Pin Diagram of L298N Motor Driver

Next, connect the power supply to pin number 4 on the L298N module and negative/GND to pin number 5 of the L298N module. In this project, we have two DC motors, therefore digital pins D9, D8, D7 and D6 will be connected to pins IN1, IN2, IN3 and IN4 respectively. Then connect D10 to pin number 7 on the module (remove the jumper first) and D5 to pin number 5 of the module (again, remove the jumper).

Figure 5: L298N Module

The direction of the DC motor is controlled by sending a HIGH or LOW signal to the drive for each of the motors. For example for motor one, a HIGH signal to IN1 and a LOW signal to IN2 so that motor will be turning one direction, and a LOW signal to IN1 and HIGH signal to IN2 will move the motor in other direction.
However, the motors will not move until a HIGH signal is set to the enable pin (7 for motor one, 12 for motor two). And they can be turned off when the LOW signal is set to the same pin. However, if you need to control the speed of the motors, the PWM signal from the digital pin connected to the enable pin.

III. Results

Following picture shows actual surveillance robot. It is having two layers on one layer pi and driver circuit is mounted. It consists of Robot Chassis along with two wheels and caster wheel. Second layer consists of camera and battery. Here we are using usb camera which can be easily connected to USB port of Pi.

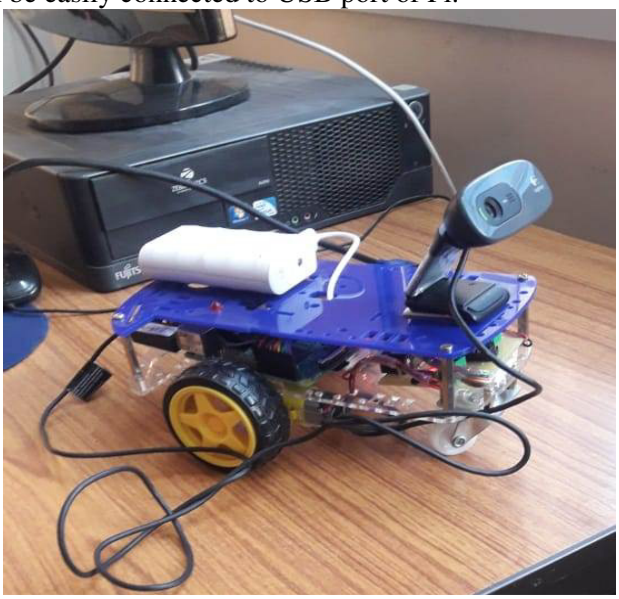

Figure 6: Surveillance Robot

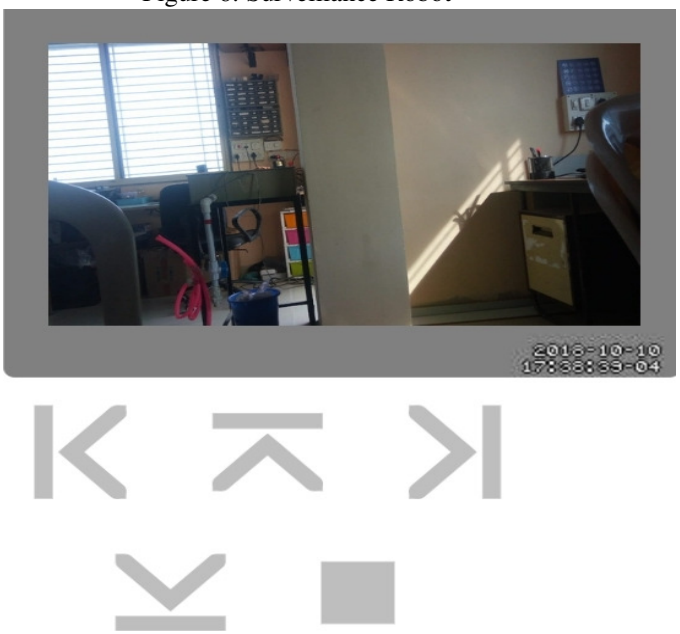

Figure 7: Video streaming with Robot control Keys

Above figure shows Video captured by surveillance robot along with its control keys. It has five keys:F,B,L,R,STOP

F – Forward Key which will move Robot in Forward direction.

B – Backward or Reverse Key which will move Robot in Reverse direction.

L – Left Key which will move Robot Left.

R – Right Key which will move Robot Right.

STOP – This will pause robot.

IV. Applications

1. Indoor spying of warehouse, campus surveillance to check the improper activities.
2. Tracking locations of terrorist organizations and then plan an attack at a suitable time.
3. Making video surveillance of any disaster affected area where human beings can't go.
4. Field view surveillance of indoor & outdoor commercial complex, factories & government buildings/organization.

V. Future Scope

We can use this system for military applications installing suitable sensors. Just by changing the robotic unit design we can use it in hospitals for patient monitoring. Using some chemical sensors we can detect harmful gas leakage in the chamber the time delay which occurs in the execution of commands can be reduced and thus we can have more real time access to the robot. With reduced time delay we can have faster operation and quick response to any illegal activities in the monitored area. Also it can be used as a spy robot. The robot is very economical.

VI. Conclusion

Using this robotic system a remote area can be monitored easily from remote end. One can easily monitor as well as control the activity of the robotic unit. This system can be used any conditions and areas where it is difficult for the security forces to reach it can monitor the areas. As the communication is done with the help of internet so limitation of range of operation does not arise and thus we can monitor any remote areas. If this robot is within the Wi-Fi range there is no need of internet too. We control the robot using the Wi-Fi as a medium.

References

[1] Wi-Fi Robot for Video Monitoring & Surveillance System By Pavan C & Dr. B. Sivakumar, International Journal of Scientific & Engineering Research Volume 3, Issue 8, August2012.

[2] robot using Zigbee Communication By Krishnaswamy Kannan and Gowtham S, International Journal of Engineering Science and Technology (IJEST), ISSN : 0975-5462 Vol. 4 No.10 October 2012.

[3] Secured Spy IP Control Robot Using Raspberry Pi By V. Meenakshi, Ch. Lakshmi Saketh, K. KalyanKumar, International Journal of Emerging Technology and Advanced Engineering, Volume 5, Issue 2, February 2015.

[4] Wi-Fi Robot for Video Monitoring & Surveillance System by Pavan C & Dr. B. Sivakumar, International Journal of Scientific & Engineering Research Volume 3, Issue 8, August2012

[5] www.raspi.org

[6] https://circuitdigest.com

[7] https://electronicsforu.com