RESEARCH ARTICLE OPEN ACCESS

Implementation of Digital power saver

M.Bhavani[1], P.Vandana[2], P.Apsana[3], M.Divya[4], N.Vanaja[5], M.L.Harika[6]
1(Assistant Professor,Department Of ECE, Bapatla Women's Engineering College, Bapatla)
2 (Department Of ECE, Bapatla Women's Engineering College, Bapatla)

Abstract:

The main objective of power saver is to reduce overall power consumption at public and private sector.MCS52series89C52 micro controller is used in the construction of power saver. The micro controller operates different loads according to time schedule programmed in EEPROME by reading the data from real time clock (RTC) for time and date. According to the user requirement the time schedule and connected load voltage can be programmed. 20 intervals per day can be used in the operation of each and every load. Different loads can be programmed according to the different timings according to day selection. Day selection is considered as primary. For practical purpose for different voltages with one 300VA transformer are taken. According to the requirement the load input voltages can be altered.

***Keywords* — *Micro-controller, RTC, EEPROM*.**

I. INTRODUCTION

This project is designed to reduce the power consumption for domestic are commercial areas. Micro- controller, RTC, EEPROM and 3 relays are used in this project design. The program is written in the micro controller reads the schedule from EEPROME and operates the channel relays subsequently. Time information from RTC is continuously read by the micro controller and compraes with the EEPROM schedule according to which 3 relays are operated. Any channel can be programmed to ON or OFF at any time.[1]

A. *Requirements of project:*

- Software
  Keil software
- Hardware
  AT 89C52 Micro controller
  RTC
  EEPROM
  Power regulators

II. HARDWARE DESCRIPTION:

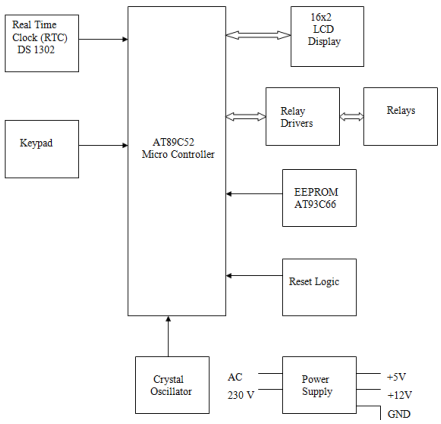

Fig1: Block Diagram of power saver

The entire electronics component such transistor, integrated circuits, etc generally requires DC for their operation. So AC supply is then stepped down. Now this stepped down AC is converted to DC supply by rectification process. There may be some ripples coming out of rectifying unit bypassed by connecting the capacitor in parallel. Then 12v supply given to the LM7805C51 regulator. Now as micro-controller, LCD module, relays and other certain ICs requires 5V DC supply for their operation we need a regulator uninterrupted 5V DC supply. Every circuit requires power for its operation. Here we require +5v dc to operate Micro-controller, Relays and certain ICs. The supply voltage of 230v ac is step downed to 12v by using the step-down Transformers. As the circuit requires only the dc supply the in fed ac is converted to dc by using the rectifying unit. This block involves production of 5V DC supply for whole circuit**.** [2]

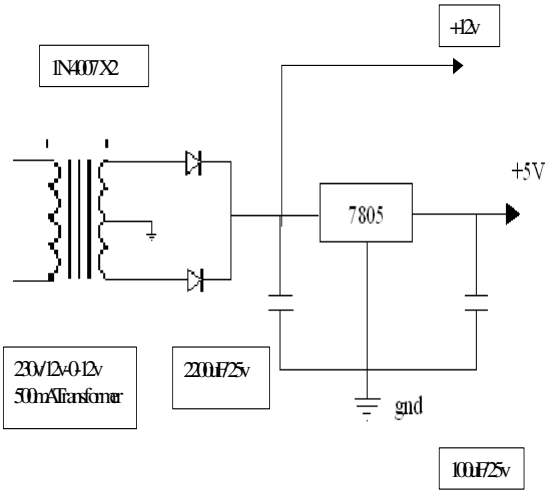

Fig2: Power supply

B. AT89C52 micro-controller:

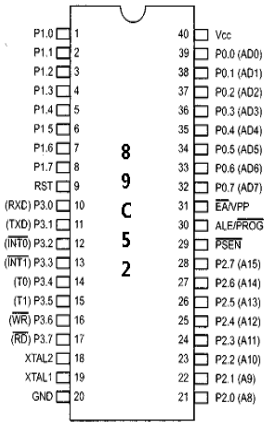

Fig3: PIN diagram of micro-controller

The whole processing of the device is done by a micro-controller.the micro-controller 89C52 is a small but powerful micro controller from Micro-chip. The AT89C52 is a low –power, high performance 8-bit micro-controller with 8Kbytes of in-system programmable flash memory. The device is manufactured using Atmel's high-density nonvolatile memory technology and is compatible with the industry-standard 80C51instruction set and pin out. The on-chip Flash allows the program memory to the reprogrammed in system are by a conventional non-volatile memory programmer. By combining a versatile 8-bit CPU with in-system programmable Flash on a monolithic chip, the Atmel AT89C52 is a powerful micro-controller which provides a highly-flexible and cost effective solution to many embedded control applications.[3]

C. EEPROM (AT93C66) :

AT93C66, a 512 bytes electrically erasable programmable ROM (EEPROM) connected to the port P2.0, P2.1, P2.2, P2.3.The purpose of using this EEPROM is for holding schedules of different timings and various timings for different days. We can store 20 intervals per day along with 7 different days. That means we can change our schedule based on days.[4]

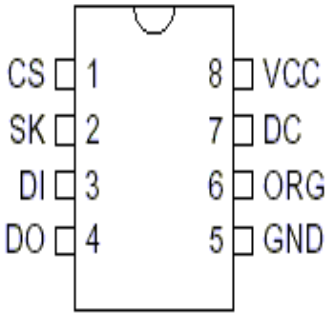

Fig4: PIN diagram of AT93C66

D. RTC (DS1302):

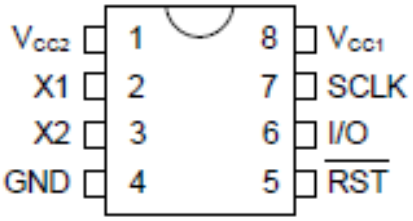

Fig5: RTC diagram

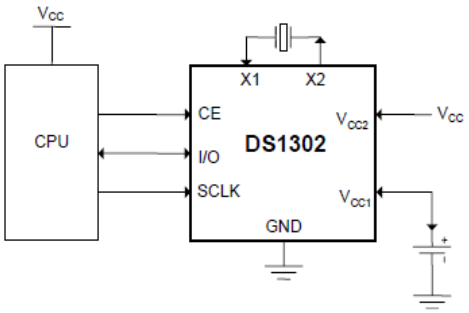

Fig6: Interfacing of RTC with PC

Real-time clock (RTC) counts seconds, minutes hours, date of the month, month, day of the week, and year with leap-year compensation valid up to 2100.It uses burst mode for reading/writing successive addresses in clock/RAM.[5]

E. Crystal Oscillator:

Crystal oscillator is used to generate a specific frequency for the operation of micro-controller. Crystal oscillator is an electronic oscillating device which works on the principal of mechanical resonance of a vibrating crystal to generate electrical signal with particular frequency. This frequency provides stable clock signal for digital ICs. The most widely used oscillator is Quartz crystal oscillator. Crystal oscillator of 11.0592MHZ frequency is connected to the pins 18 & 19 of micro-controller along with capacitor of 33PF connected to the ground. It generates a sine wave which is converted in to square wave internally. It produces serial data require for the micro-controller. The speed of the micro-controller depends on the frequency of the crystal oscillator.[6]

Fig7: Crystal Oscillator

III. OPERATION:

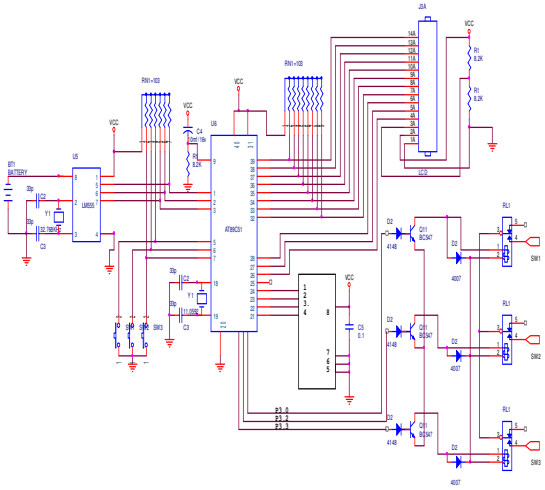

Fig8: Circuit Diagram

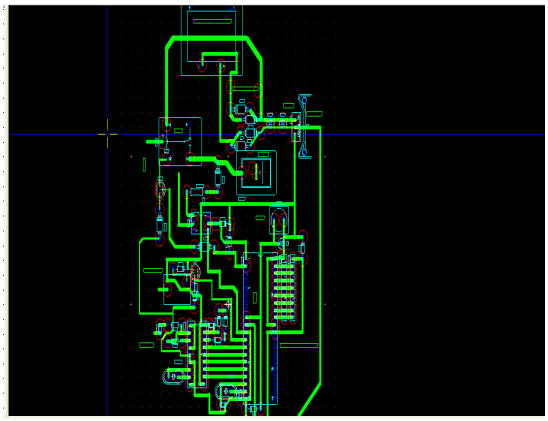

Fig9: PCB layout

All the components of the circuit are placed on the PCB (printed component board). This project is design to reduce the power consumption. Power supply generates dc 5V required for the micro-controller. Time schedule is programmed in EEPROM. The program is written in the micro-controller to operate the circuit. Micro-controller plays a major role. It is the brain of the system which reads time information from RTC and compares with schedule in EEPROM. Crystal oscillator increases the speed of micro-controller. Time information (to ON/OFF) is programmed in RTC which can be changed according to the need. Time is saved in RTC by using a battery when primary supply of the circuit is OFF. 16 pin LCD is connected to micro-controller to display date and time which is saved in the RTC. The Relay is used to connect the devices (bulbs, fans, ac etc..) to the system. Relay drivers are used to drive the relay. To interface the overall circuit with the computer MX232 is used. Now over all operation is seen on the computer. Reset Logic is used to reset the micro-controller. Pull up resistors of 1kΩ each are connected to the each pin of the four ports of the micro-controller.[7]

IV. ADVANTAGES:

1. Reduces the consumption of power by a significant amount.
2. Ease of maintenance and control.
3. Reduces electricity cost, prolongs life span of devices and equipment.
4. Saves labor cost and material cost.
5. Proposed system has simple components of low cost . All components are easily available.
6. Due to lack of mechanical and moving elements the devices require less regular maintenance work in their life span.[8]

V. APPLICATIONS:

1. Major Roadways.
2. Residential Streets.
3. Advertising Hoardings.
4. Commercial sign boards.
5. Parking lots.[9]

VI. TESTS & RESULTS:

A. Tests:

1. The DC supply is taken to the output is 5V.
2. For basic project information the LCD display is displayed.
3. By entering the front panel keys are tested onto the programming mode.
4. By erasing the total data EEPROM test will conducted.
5. At that time running the process of initialization is tested by RTC.
6. Power ON Offs ,as per schedule in EEPROM are tested.

B. Results:

This project "Implementation of Digital power saver" is successful in controlling the devices defined for required timings and when the power is OFF. The clock is displayed on the LCD segment and it is running internally. On the basis of traffic density is perfectly controlled by LED's

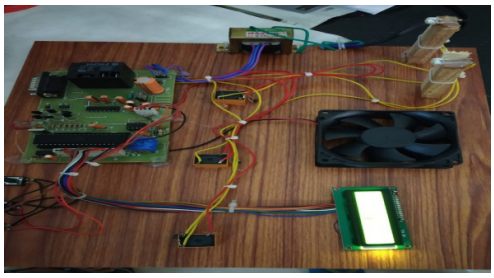

This figure shows that all channels are OFF initially when the power is ON.

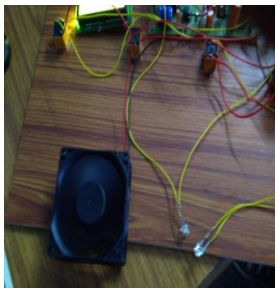

This figure shows that one channel ON and remaining two are OFF.

This figure shows that all channels are ON.

VII. CONCLUSION:

The project "Implementation of Digital Power Saver" has been successfully completed and tested. The hardware components used in it has developed the project. Every block present in the project contribute to it's best working and is placed reasonably and carefully.

The components used in the project are simple and less expensive making it light weight and portable.

Finally we conclude that there is a scope for further research and development resulting in reduction in power consumption tremendously and it will be an innovative solution for saving the power.

VIII. ACKNOWLEDGEMENT:

We sincerely thank to my project guide, who helped me in all aspects of my project to complete in short term. We also thank Bapatla Women's Engineering College for providing necessary facilities towards carrying out this work.

References:

[1]. WU Yue, SHI Chang Hong, ZHANG Xianghong, " Design of new intelligent street light control system", IEEE international conference on Control and Automation, China, June, 2011.

[2]. Muhammad Ali Mazidi, Gillispie Mazidi, McKinlay, "The 8051 Microcontroller and Embedded Systems", second edition, pp. 20-23.

[3]. http://www.keil.com/dd/docs/datashts/atmel/at89s52_ds.pdf.

[4]. http://www.maxim-ic.com/datasheet/index.mvp/id/2685

[5]. http://www.digchip.com/datasheets/parts/datasheet/054/AT93C66-10PC-1_8.php

[6]. Ajay V Deshmukh, "Microcontrollers: theory and applications", second edition, 2005, pp: 304-306.

[7]. R.L. Boylestad and Louis Nashelsky, "Electronic devices and circuits", Pearson/Prentice hall, 9th edition, 2006.

[8]. Optical circuits' manual by Heimann Newnes, 1988.

[9]. D.J.R.Cristaldi, S.Pennisi, F. Pulvirenti, "Liquid Crystal Display Drivers - Techniques and Circuits", second edition, 2003, pp. 23-26.

[10]. Kelvin R. Sullivan, "Automotive series understanding relays", handbook on basic electronics, 2005, pp. 12-13.

[11]. http://www.keil.com/c51/

[12]. Kriag Mitzner, "Complete PCB design using OrCad capture and layout", 2007.