RESEARCH ARTICLE OPEN ACCESS

Surveillance Car using Arduino

Kalpit Jadhav[1], Ravi Gupta[2], Sameer Matkar[3]and Isha Gujarathi[4]

(Department of Electronics and Telecommunication, Rajiv Gandhi Institute of Technology, Mumbai University, India
Email: kalpit1612kpj@gmail.com)[1]

(Department of Electronics and Telecommunication, Rajiv Gandhi Institute of Technology, Mumbai University, India
Email: ravigupta121911@gmail.com)[2]

(Department of Electronics and Telecommunication, Rajiv Gandhi Institute of Technology, Mumbai University, India
Email: sameermatkar5@gmail.com)[3]

(Department of Electronics and Telecommunication, Rajiv Gandhi Institute of Technology, Mumbai University, India
Email: ishagujarathi3@gmail.com)[4]

Abstract:

The proposed work presents designing and development of a multipurpose smart robot car using wireless camera detecting harmful gases, metals, obstacles at remote areas and send information to main location. The proposed system uses machine intelligence to provide immediate response from sensors. The robot system is equipped with sensors those can alert the user when some anomaly appears within the range while robot is working.Robotic system can perform many securityandsurveillancefunctionsmoreeffectivelythanhumans.Alsoalongwithgivingtherealtimedatatotheuserwhowillcontrolthebot,needsto send data of the terrain immediately.Such a bot needs to have a sturdy body with wheels andsensors that can tolerate extremeconditions.

I. INTRODUCTION

Car automation and surveillance is an escalating trend in this decade. Smart Vehicle with surveillance lance is becoming an indispensable need as it makes it easier for the owners to ensure their automobile'ssafetywirelesslytogetotherinformationrelatedtoit.Thecoreelementsinoursystemconsists of a mini central processing unit, motion detecting sensor accompanied with a camera module, temperature, humidity and gas sensors.The common platform used here is the mini CPU 'ArduinoUNO' which interfaces all the embedded peripherals simultaneously, so that our vehicle can be managed through our mobile phones with minimalcost. Surveillanceisachievedbydeployingpersonnelnearsensitiveareasinordertoconstantlymonitor for changes. But humans do have their limitations, and deployment in inaccessible places is not always possible. There are also added risks. With advances in technology over the years, however, it is possibly to remotely monitor areas of importance by using robots in place of humans. Apart from the obvious advantage of not having to risk any personnel, terrestrial and aerial robots canalso pickupdetailsthat humans can't.

Thephones come equipped with the required features such as a GPS module, a high resolution camera and internet connectivity. Due to the extremely efficient supply chains that go intomanufacturingconsumerelectronicdevices,these phonescomequitecheapforthefeaturesthattheyprovide. Also, the operating system on these smartphones provide Application Programmer Interfaces forusingthevarioussensorswithease.Byusingtheinterfacesprovided,wecaneasilywriteappswithout the complication of writing driver code. In our system, we have used a smartphone running the Android Operating System , which is one the most popular mobile operating systems today. Thus, it is our aim to build a fully-featured surveillance robot using an easily available Android phone, which can be remotely controlled over theintern.

II. PROBLEM STATEMENT

- Use of wire robots restricts many security activities.
- CCTV can monitor in a limited area and criminals can steal or vandalize the cameras easily since usually the camera are fixed on a wall or apole.
- Due to presence of harmful gases in the mining areas , the workers may face a lot ofproblems in case of anyaccidents.
- Also in industries human access becomes difficult in highly corrosive or flammable region or in nuclear radioactivesystems.

III. PROJECT OBJECTIVES

- To connect a camera to a car which will help provide surveillance on the target object through live video streaming.
- To develop android application that will wirelessly control therobot.
- To make a robot to tackle the hostage situation the worst conditions which cannot be handled by humanbeing.
- ToalertHumansfromdirectexposuretopotentially dangeroussituationsthatcanoccurduring mining and in industrialoperations.
- To perform many security and surveillance functions moreeffectively.

IV. BLOCK DIAGRAM OF THE SYSTEM

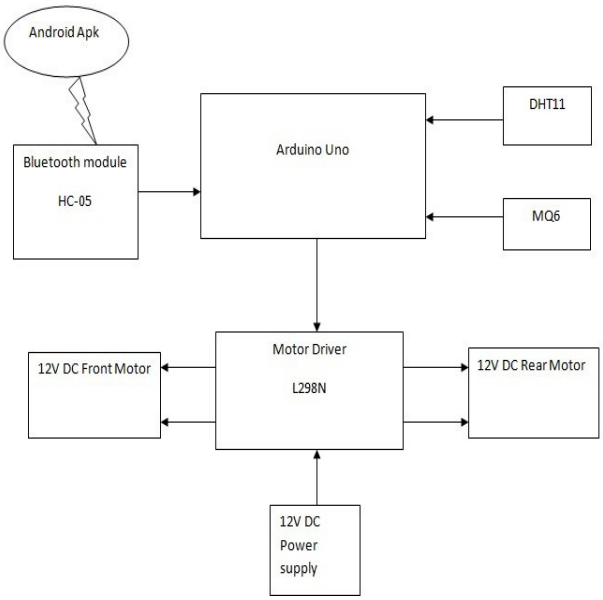

Figure(1) Block Diagram

The figure shows the interfacing of the sensors .

The temperature & humidity sensor and the gas detection sensor works normally and wireless camera sends the audio and video signals at user side without any delay. Through wireless camera user controls the robot in real time.The IP camera is used to send video feedback to the remote usersimultaneously over the internet.

The DHT 11 sensor is interfaced with Arduino and indicates temperature/humidity. MQ-6 gas sensor will detect the harmful hydrocarbons gas which are there in the mining regions and in the industries.

Motor driver IC is used to control the dc motors. It is also interfaced with the microcontroller.

V. EXPLANATION

1. Calculation of Temperature and Humidity using DHT-11

The DHT11 detects water vapour by measuring the electrical resistance between two electrodes. The humidity sensing component is a moisture holding substrate with electrodes applied to the surface. When water vapour is absorbed by the substrate, ions are released by the substrate which in-creasestheconductivitybetweentheelectrodes.Thechangeinresistancebetweenthetwoelectrodes is proportional to the relative humidity. Higher relative humidity decreases the resistance between the electrodes, while lower relative humidity increases the resistance between theelectrodes.

The DHT11 uses just one signal wire to transmit data to the Arduino. Power comes from separate 5V and ground wires. A 10K Ohm pull-up resistor is needed between the signal line and 5V line to make sure the signal level stays high by default (see the datasheet for more info).

2. Calculating Gas value using MQ-6

Gas leakage is one of the commonreasonsfor fire breakouts. A leakage turns out to be cause of terrible accident particularly in closed buildings. Many of the hotels and restaurants do not keepany security measures to detect gas leakage due to lack of enforcement of standards and presumption thatinstallingsuchprecautionarysystemswillbecostly. Thisisagasleakagedetectionprojectbased onArduinoUNO.ThelowcostprojectusesMQ6gassensorwhichcanbecalibratedtodetectleakage levels based on surroundings. The installation generates a sound alert using buzzer on detection of a dangerous leakage. The project utilizes the 434 MHz RF module so the alarm can be installed anywhere within the building and even multiple alarms can be installed within abuilding.

The MQ6 gas sensor detects concentration of gas in ppm and outputs analog value which can be converted to digital measure using in-built Analog to Digital Converter of Arduino. The value of the digital measure will be 10-bit long and varies from 0 to 1023. The project allows user to set the dangerous level for leakage based on the same digital measure. When the value set by the user matches with that of the value detected by the sensor, it invokes the alarm. The MQ6 sensor can be calibrated by interfacing a load resistance of fixed value with thesensor.

3. Communication Between Mobile and Robot using BluetoothModule

Bluetooth Communication is a 2.4GHz frequency based RF Communication with a range of approximately 10 meters. It is one of the most popular and most frequently used low range communicationfordatatransfer,audiosystems,hands-free,computerperipheralsetc.Thismoduleisbasedon BC417SingleChipBluetoothICthatiscompliantwithBluetoothv2.0standardandwithsupportfor bothUARTandUSBinterfaces.Generally,theHC-05BluetoothModule,ortheHC-05SubModule, to be precise, comes with the BC417 IC along with a flashmemory.

TheHC-05ModulesupportsforUART,USBaswellasSPIcommunicationanddependingonthe application,necessarypinscanbeused.Inmycase,theboardusesthe UART communication.Com- ing to the pins of the Bluetooth Module, generally, four pins are sufficient for successfully enabling a wireless communication link but the modules produced now-a-days come with six pins namely: VCC, GND, TX, RX, EN and STATE. An important point to remember is the HC-05 Bluetooth Module works on a logic level of 3.3V. Hence, a 3.3V Regulator is used on theboard.

4. Connection between Motor Driver and Motors

DCMotorsarefurtherclassifiedintodifferenttypeslikeseries,shuntandcompoundandeachtype is used in different areas of applications. Some DC motors are also used in Robotic and Industrial applications for their easy control and precision. Since DC motors are generally associated with small to medium applications, where the system mainly consists of a Microcontroller as the main processing unit, controlling and driving a DC motor is very important. This is because, driving a motor directly using the microcontroller is not advised (sometimes not possible) as the current from the Microcontroller is very small (usually less than30mA).

L293DisaquadrupleH-bridge,highcurrentmotordriverIC.Itcanbeusedtodrivetwomotorsat a time in both the directions with an output current of 600mAfor each motor. L293D IC isdesignedto drive relays, DC motors, stepper motors and other inductive loads with high current and high voltage requirements.

5. Wireless Video Transmission

The above block diagram shows the connection between camera and end user wirelessly. The wireless IP camera is configured with wifi router. Dynamic IP address is allocated to camera aswell as end user. Camera records video and compresses it. Then it is transmitted to router and from there it is transmitted to end user. Only user having proper IP address of camera can access it. That's how we have achieved wireless transmission of video with minimum lagging and accuratetransmission.

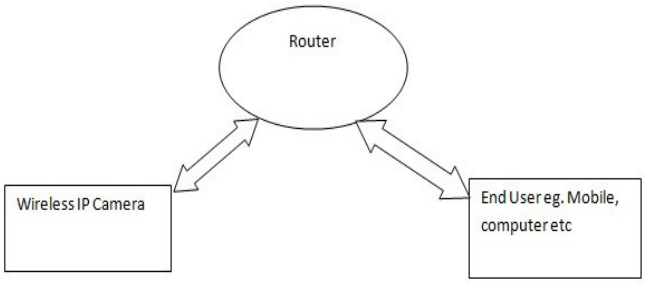

Figure(2) Wireless Video Transmission

6. Setting the Arduino

Start theArduino softwareIDEbydouble-clickingtheArduinoapplication.Checkthatthecorrect Arduinoboard is selected. Change if necessary. Now check that the correct serial port is selected and change if necessary. This is the serial port that you took note of after installing the Arduinodriver.

Open the Blink sketch in the Arduino IDE. Click the Arduino Upload button to load the sketch to the Arduino. This sketch will flash the on-board LED on the Arduino. If the sketch runs then you know that you have successfully installed the Arduino software and driver.

7. Interfacing Bluetooth module with Arduino

To demonstrate the connection between HC-05 Module and Arduino, we followed this simple circuit. The aim of this circuit is to connect the Bluetooth Module with Arduino, Pair the Bluetooth Module with an Android Phone, send data from Android Phone to the Bluetooth Module using a simple App, read the data from Bluetooth Module through Arduino and finally, display the data and control a device based on the data. Following image shows the circuit diagram of the connection between Arduino Mega and HC-05

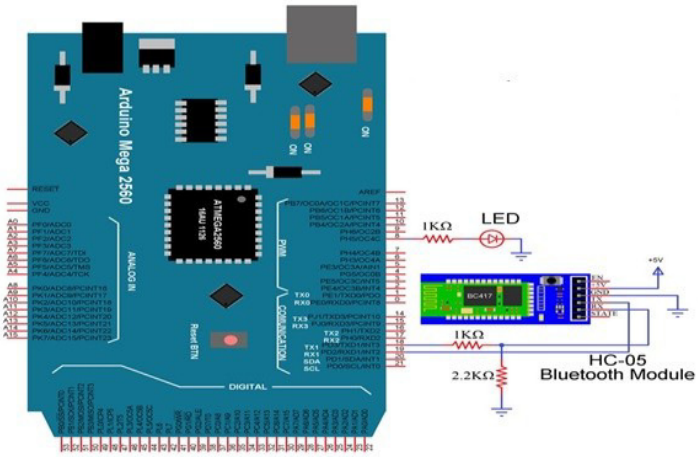

Figure(3) Interfacing Bluetooth with Arduino

Once the Bluetooth Module is paired with your phone, you can start using the App. Open the Bluetooth Controller App and click on scan. A list of Bluetooth Devices will appear on the screen. Select HC-05. Now, select Set Keys option in the app and enter the following information. Assembletherobot,makethenecessaryconnectionsan duploadthecodetoArduino.

8. Setting the Camera

Technically,the majort ask for IP camera configuration is to get theright IP address of your camera hich serves as the only cluet of indit among various devices attached to the same network.

The IP camera installation and configuration on the local area network (LAN) could be a little different from that in the wide area network (WAN).

To configure IP cameras on the LAN, like the typical home network, there is a need to find out the

CCTV camera local IP address. And then you only need to input the IP address on the web search bar to get into the camera's web UI, and then everything will appear.

VI. CIRCUITARY

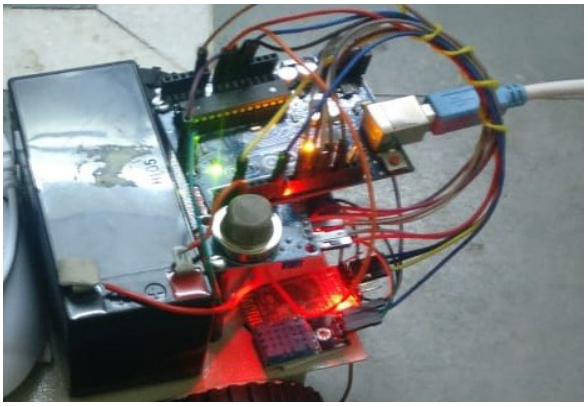

Figure(4) Prototype design

The Circuitry goes in a way that the temperature sensor, gas sensor, motor driver are connectedtothearduinowhereinthedatafromtheseperi pheralswillbeprocessed.Afterprocessingthedatathe actions will be taken accordingly If the temperature value reaches the impermissible area, the bot will move away from such area, but not before giving the live transmission. Similarly, the bot will act for the gas sensor values. The movement of the bot is controlled by the motor driver who is responsible for the rotary movement of the motors attached to the wheels. The camera module is connected to a network area which demonstrates a satellite communication based on encrypted and securedcommunicationsystemforthelivevideotransm issiononthe360degrees.Thebotischarged by a 12V powersupply.

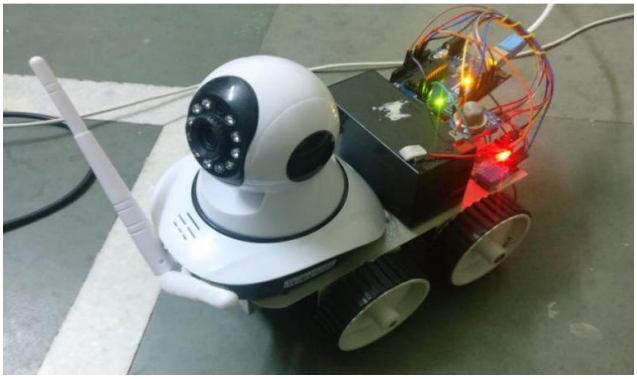

Figure(5) Final Bot

VII. FUTURE SCOPE

We can add many features in future scope. The sensor data which is collected can be transferred to server via Internet of things. We can increase the range of wireless Robot using more advanced module. Camera video transmission can be made very clear and accurate if the bandwidth is in-creased. Also sensor data can be wirelessly transmitted if we use multiple UART controller whose implementing cost is large.

VIII. CONCLUSION

We have made this prototype surveillance robot. It has features such as temperature indicator, humidityindicator,livecameratransmissionusingrout erandWirelessControllingofrobot.Wireless video is transmitted with the help of router. It was little lagging due to bandwidth constraints. The sensors are showing accurate values when compared with other measuring instruments. Gas sensor value is showing around 138 which is normal value. The value increases above 150 if any gas is present. The controlling of robot via bluetooth was done perfectly and range was30ft.

ACKNOWLEDGEMENT

This project would not have been possible without the kind support and help of many individuals and organizations. We would like to extend our sincere thanks to all of them.We are highly indebted to our project guides for their guidance and constant supervision well as for providing necessary information regarding the project and also for their support in completing the project. We would like to express our gratitude towards our parents for their kind cooperation and encouragement which helped us in completion of thisproject.

REFERENCES

[1]*Ayan Maity, Avijit Paul, Priyanka Goswani, , "AndroidApplication Based Bluetooth Controlled Robotic Car" International Journal of Intelligent Information Systems. Vol.6-November 29,2017.*

[2] Subhankar Roy, Tashi Rapden Wangchuk, Rajesh Bhatt

"Android Based Bluetooth Controlled Robot" International Journal of Engineering Trends and Technology (IJETT)-Volume 32 Number 5-February 2016.

[3] Khushwat Jain, Vemu Suluchana "Design and Development of Smart Robot Car" International Journal of Computer Applications (0975-8887) Volume 76-No.7, August 2013.

[4] Dr. Pikulkaew Tangtisanon "Android-Based Surveillance Car" Faculty of Engineering King Mongkut's Institute of Technology Ladkrabang Bangkok, Thailand.

[5] M. Selvam, "Smart phone based robotic control for surveillance applications", Dept. of ECE Karpagam University Coimbatore Tamil Nadu International Journal of Research in Engineering and Technology (2014).

[6] Borker Kunal, Rohan Gaikwad, Ajaysingh Rajput, "Wireless Controlled Surveillance Robot", International Journal, vol. 2.2, 2014.