RESEARCH ARTICLE OPEN ACCESS

# Improvement in Substation Protection Using Thyristor Gate Pulse Control Technique

Mr. Amit Ravindra Bopshetti[1],
Mr. Sanket Anil Bhamre[2], Mr. Shashank Satish Jadhav[3],

[1]*BE student, Electrical Department, GCoE, Nagaon, Dhule, Maharastra, India*
[2]*BE student, Electrical Department, GCoE, Nagaon, Dhule, Maharastra, India*
[3]*BE student, Electrical Department, GCoE, Nagaon, Dhule, Maharastra, India*
***Guidance Prof. Vinod A. Malpure. Lecturer, GCoE, Nagaon, Dhule, Maharashtra, India.***

## Abstract:

In power system includes various stages like generation, transmission and distribution. All of this stage required protection scheme because each stage voltage levels ar large. That about generating voltage is 11kv. Transmission voltage level is about 11kv, 132kv, 220kv, 400kv. This high voltage step-down by distribution level. But there is presence of various types of fault in this system like line to line, line to ground, double line to ground fault and fault due to lightening. Therefore it is necessary that protects the system against such abnormal conditions. So protection scheme to be provided to provide protection within less time. So as per subject scheme take very less time to protection system from dangerous abnormal conditions.Power electronic devices of thyristor family are required for selecting arrangements.Microprocessor available to implement system protection performance.

**Keywords:** kilo volt (kV), current transformer (CT), silicon controlled rectifier (SCR).

## I INTRODUCTION

When generally a fault is being detected that would be normally unseen that means we may possibly not find where fault essentially occurred. As a result we might not take an action for fitting the problem. In Bangladesh we have numerous hill tracks area such as Sylhet, Bandarban, Khagrachory, etc. and a great amount of jungle is having there. This is very difficult to maintain and find out the problem where exactly happened those types of area. On account of the project and research work a blessing word is introduced to us that is if a fault is noticed we can find easily find the suspect's region where fault is occurred. At this moment we have no any alternative solution. Our project is being firstly presented to our nation for preventing the problem through an accurate and acceptable solution. By implementing the planned work we can detect the fault easily by getting a SMS from cell phone on blessing of using GSM module. The authentic goal is that the sense of fault in exact time and protecting the transformer at the shortest conceivable time. It is significant to note that transformers are very costly the reason is that a 11KV transformer on an average costs 3500 US$. If the particular person does not take an action in an exact time the transformer will be damaged within any sign within a second. But if this system will use the transformer might be harmless without any hesitation. So this study and authors are developing a cost effective and fast response system aiding in improving safety.

## II LITRATURE SURVEY

Remote Video Surveillance System for Substation(RVSS) can supply real-time image of equipment in power system substation, improve the reliability and security of substation operation. RVSS has already become the necessary item of the substation construction. As the most important communication service in digital substation, GOOSE(Generic Object Oriented Substation Event) is used in the control of primary devices and the interlock and linkage among secondary devices. In this paper, a method is introduced to realize linkage control of RVSS with relay protection. The information of protection action is obtained by analysis of the GOOSE message in substation communication network and the video system is then driven [1]

—Substation-area protection is the key aspect of new generation protection system with a layered structure in smart substation. This paper[2] describes the concept, coverage and functions of substation-area protection and the coordination with other subsystems. Then an idea of implementing full-featured applications of substation-area protection gradually has been proposed. According to the practical functions, a series of protection modules have been designed subsequently, which involve unit redundancy protection, optimized substation-area backup protection and substation-area automatic controller. To meet the requirements mentioned above, a dedicated hardware platform has been proposed, including main processor module, FPGA (field programmable gate array) data processing module and a data communication

module between boards. Finally, a prototype of substation-area protection adopting the proposed design has been realized. The performance of the prototype is evaluated through static experiments and RTDS (Real Time Digital Simulator) simulation of a typical 110kV substation. The test results show that the specialized indexes of the prototype have fully reached engineering requirements. [2]

Reliable and efficient operation of substation equipment is of considerable importance to transmission and distribution networks. The paper [3]explores the new emerging IEC6 1850 substation communication standard and presents an LEC 61850 based laboratory platform that consists of Real Time Digital Simulator (RTDS). several embedded Programmable Interrupt Controller (PIC) boards and a PC. The RTDS is used to simulate a substation suitable for the investigation of various monitoring, protection and control functions. Embedded microcomputer boards are used as Intelligent Electronic Devices (IEDs) or relays to sample and control the substation equipment. The PC is used as the substation micro SCADA system having client/server communication software and Human Machine Interface (HMI). It displays the status of the substation equipment graphically. An integrated application for monitoring the power quality in the substation is presented and discussed.[3]

—Based on analyzing the status and existing questions of voltage and reactive power integrated control for substations, this paper presents a new voltage and reactive power control system based on fuzzy logic and dynamic borderline applying fuzzy control theory. Simulation tests and practical running have proved that this approach can reduce the adjust times of transformer tap and capacitor effectively and improve the control function.[4]

—In this paper [5], the protection latency time between traditional and intelligent substations are compared and analyzed. In traditional substation, the analog information such as current and voltage are tranmitted to the protection and control devices via electric cable, while in intelligent substation the introduction of digital protection devices and intelligent substation prolong the protection time, which brings safe threaten to the cutoff of power system fault. The compositions of operation latency time are compared in each link and two major different time latency links are analyzed in details, and the mechanism of time latency is investigated and the effective meausures to reduce the protection latency time are proposed. Finally, the experiment of protection time comparison between two is carried out and the results prove the validity of theoretical analysis.[5]

Hazardous situations are mainly established in case of power system some of the situations are neglecting but some will happen dangerous loss in case human equipment therefore recent power system protection are can be able to protect against this hazardous situations but may be protection speed that are not give fulfillness to immediate protect the system it means that at every state require controlling operation for instant protection. But **we** just help of proctor system at every stage but power electronics require at protection system. Therefore we know that without processor we cannot protected the system immediately. That system can be help us to be instant protection of the power system .in this case time can be control and we prevent hazardous and abnormal conditions.

## III PROPOSED SYSTEM

In the case of power system, the most important factor in substation and its importance of protection is more seriously take into consideration. Now a day available protective arrangement is make it protection improve their ability**.**

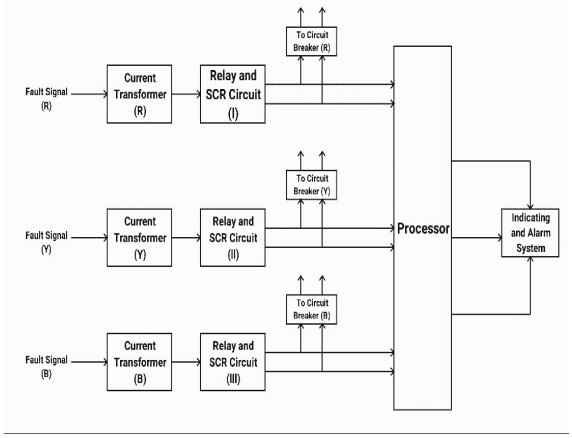


**Figure 1:** Block diagram of protective arrangement

## IV OPERATING PRINCIPLE

In that system it also gives faithfully protection as small as time duration. The power electronics device like thyristor fives high speed operation. Today's substation having protected itself from various arrangements. As every system of substation current transformer plays an important role. It make as a sensing device and sense extended fault current and this send that current to protective relay system. After that send to instruction to circuit breaker to function as open their contact to protect line.

But we should know that, copper winding present in instrumentation transformer and relay system and this cause makes copper losses in it. In every rising of fault current sense by current transformer, but according to that losses property of winding utilized there first rising fault current as copper losses. After their final capacity of losses remains fault current feed to relay. But this all process happened in protective relay also. But important factor is that, in parallel fault current continuous to rise in line. This continuous fault raining current able to damage the system.

In that system, provided with power electronics device like thyristor, which is connected to relay. Here simply make arrangement of relay with thyristor, where functioning of relay totally depend on thyristor. As any fault produced in any phase R, Y, B this arrival of fault current, sense by current transformer. As per their property of copper losses in CT of that particular phase take some current in loss it. But while supply to the gate terminal of thyristor as pulse it fired and then turn ON. This produced the relay circuit complete. Relay trip and send the instruction to circuit breaker. Therefore, lesses time required for that system to protect

from the fault than time require for ordinary system to protect from the fault current.

For example, if normal current is lime is 100 Ampere and simply produce fault cases start to increase up to 10 Ampere. But at least 5 Ampere causes in losses as copper loss. And remains 5 Ampere supply to relay. But in relay also causes make copper losses in it due to the presence of copper winding in it. Therefore fault current divided into two parts.

But in that system make simpler and reduce the duration of fault clearing. In this case there are only setup is that fault current sensed by CT send to as firing pulse to the system of thyristor. Both relay system is already energized and connected to anode of thyristor.

After the firing pulse thyristor turn ON and parallel relay completed their circuit, it trip and send signal to circuit breaker of that particular faulty phase. Therefore a current loss in each component is reduced and instantly systems get protected from huge fault in minimum duration.

## V OBSERVATION AND DISCUSSION

In this paper we observed that the provided a system takes minimum fault clearing time to protect system against any abnormal condition which is discuss below with an example

If fault current is 4Amp from the starting of fault

Vs is 110 V DC

Resistance = 20Ω

Inductance = 0.5H

$$i(t) = \frac{Vs}{R} \quad [1-e^{-tR/L}]$$

$$4 = \frac{110}{20} \quad [1-e^{-t(20)/0.5}]$$

$$4 = 5.5\ [1-e^{-t(40)}]$$

$$0.727 = [1-e^{\ t(40)}]$$

$$-e^{-t(40)} = 0.565$$

Log both side

-40t = -0.565

t = 14.12 µsec.

Gate pulse width to require turn ON SCR is 14.12 µsec.

At that case relay circuit get completed and it tripped to send an instruction to CB to open it. Therefore, it can be says that ordinary system for protection of substation require to dependent of on relaying system to operate under abnormal conditions. But that system will protection mainly dependent on firing pulse duration, at adjusting the firing angle to gate pulse relay tripping can be set as per operator so very few second is require to protect against abnormal situations.

## VI CONCLUSION

There are various types of fault and abnormal conditions in power system and can be damage sensitive equipment but that system make them to take immigrate action in small duration. The use of thyristor help as per set there firing pulse duration protection timing can be changes. By using that arrangement faulty parts of substation as quickly disconnect and improve stability. At the time of instant of making of fault like L-L, L-L-L, L-G vary small value of abnormal current relay system protect and separate healthy and faulty part.

.

## REFERENCES

[1]Yongchun Su, Xiaoming Wang "Video System Linkage Control with Relay Protection in Digital Substation" 978-1-4244-4813-5/10/$25.00 ©2010 IEEE

[2] Binchao Zhao, Chao Yang, Yongbo Wang, Hong Wang "Functions and Implementation of Substation-area Backup Protection in Smart Substation" 978-1-5090-6414-4/17/$31.00 ©2017 IEEE

[3] H.Y. Li*, P.A. Crossley* and J. Fitch, "Development Of Iec61850 Hardware Laboratory Platform For Substation Protection And Control Integration" pg.no.501-505

[4] XU Yan, LIU Qing, WANG Fei, WANG Zengping ,"A Novel Method on Substation Reactive Power Control with the Fuzzy Logic Method" IEEE

[5] Pang Fubin, Gao Lei, Yang Yi, Yuan Yubo, "Comparison and analysis of protection latency time between intelligent and traditional substations" 2016 China International Conference on Electricity Distribution (CICED 2016) Xi'an, 10-13 Aug, 2016

[6] M. Adamiak and W. Premerlani, "The Role of Utility Communications in a Deregulated Environment," IEEE Hawaii International Conference on System Sciences, 1999