RESEARCH ARTICLE OPEN ACCESS

Design and Implementation of Real Time Pick and Place Robot Controlled by Hand Gesture

K.Parvateesam[1], P.Satya Sruthi[2]

1(Electronics and Communication Engineering, , Aditya College of Engineering and Technology, Kakinada, AP
Email: kundaparvateesam@gmail.com)

2 (Computer Science and Engineering, Aditya College of Engineering and Technology, Kakinada, AP
Email: sruthi540@gmail.com)

Abstract:

Today human machine interaction is moving away from keypad and is becoming pervasive and much more compatible with the physical world. Robots are playing an important role in automation across the entire sectors like construction, military, medical, manufacturing, etc. Gestures are playing vital role in the automation. The main purpose of using gesture is that it provides a more natural way of controlling and provides a rich and intuitive form of interaction with the robotic system. The pick and place means to pick the certain object from one location and place it to another desired location. This work can be done by machine called pick and place robot. The robotic arm kit is made of two sections. The bottom driving unit takes the robot to left, right, backward, forward and other six direction motions. These all six direction motions are controlled by the accelerometer. The top gripper unit is to pick and place any object. The gripper unit is controlled by the flex sensor. The driving unit has four dc motors and two motor drivers. The two sections in this project are transmitter and receiver will be communicated through ZigBee/XBee wireless protocol. The robot is strong enough to handle the task like rescue, transporting etc. The pick and place robots are designed, implemented in various fields such as in bottle filling industry, packing industry, used in surveillance to detect and destroy the bombs etc. The pick and place robot is controlled by Arduino UNO and ZigBee/XBee module.

Keywords — Pick & Place Robo, Arduino UNO, ZigBee/XBee module, Hand Gesture.

I.INTRODUCTION

In today's life automation plays very important role. Robotic arm is called as robot manipulator which can perform various functions as human arm performs. Many industries use a robot for various functions where important part of any robot is robotic arm or called as robot manipulator should be controlled precisely depending upon application. In industry or any application robot manipulator can be used for applications like welding, trimming; picking etc. Advantage of such robotic arm is it can work in hazards area, which cannot be accessed by human. Many parameters of robot are designed according to requirement. There are different ways to control robotic arm like Voice Controlled, Keypad Control, Gesture Control, etc. Our project is based on gesture control. Implemented system consists of transmitter & receiver. Transmitter is nothing but human hand with flex sensors, accelerometer & receiver is robot manipulator. Motion of transmitter is wirelessly transmitted to receiver through ZigBee/XBee module. Robotic arm which is receiver is nothing but a mechanical system formed by different joints and end and effectors i.e. gripper movements of these fingers or gripper can be carried out using DC motors when user carry out motion of hand for any application at transmitter side same movement is copied by receiver as on transmitter there are flex sensors, accelerometer mounted on glove at transmitter which change its resistance depending on movement of user. Robotics is a current emerging technology in the field of science. Nowadays, robots are increasingly being integrated into working tasks to replace humans especially to perform the repetitive task. In general, robotics can be divided into two areas, industrial and service

robotics these robots are currently used in many fields of applications including office, military tasks, hospital operations, dangerous environment and agriculture. Besides, it might be difficult or dangerous for humans to do some specific tasks like picking up explosive chemicals, defusing bombs or in worst case scenario to pick and place the bomb somewhere for containment and for repeated pick and place action in industries. Hence, it is proposed to develop something that breaks the barriers and brings the digital world closer to the human world using accelerometers, gestures (flex sensors), latest wireless communication.

II.HARDWARE DESIGN OF THE SYSTEM

In order for applications to communicate, their comprising devices must use a common application protocol (types of messages, formats and so on); these sets of conventions are grouped in profiles. Furthermore, binding is decided upon by matching input and output cluster identifiers, unique within the context of a given profile and associated to an incoming or outgoing data flow in a device. Binding tables contain source and destination pairs. Depending on the available information, device discovery may follow different methods. When the network address is known, the IEEE address can be requested using unicast communication. When it is not, petitions are broadcast (the IEEE address being part of the response payload). End devices will simply respond with the requested address, while a network coordinator or a router will also send the addresses of all the devices associated with it. This extended discovery protocol permits external devices to find out about devices in a network and the services that they offer, which endpoints can report when queried by the discovering device (which has previously obtained their addresses). Matching services can also be used. The use of cluster identifiers enforces the binding of complementary entities by means of the binding tables, which are maintained by ZigBee/XBee coordinators, as the table must be always available within a network and coordinators are most likely to have a permanent power supply. Backups, managed by higher-level layers, may be needed by some applications. Binding requires an established communication link; after it exists, whether to add a new node to the network is decided, according to the application and security policies. Communication can happen right after the association. Direct addressing uses both radio address and endpoint identifier, whereas indirect addressing uses every relevant field (address, endpoint, cluster and attribute) and requires that they be sent to the network coordinator, which maintains associations and translates requests for communication. Indirect addressing is particularly useful to keep some devices very simple and minimize their need for storage. Besides these two methods, broadcast to all endpoints in a device is available, and group addressing is used to communicate with groups of endpoints belonging to a set of devices.

A Block diagram

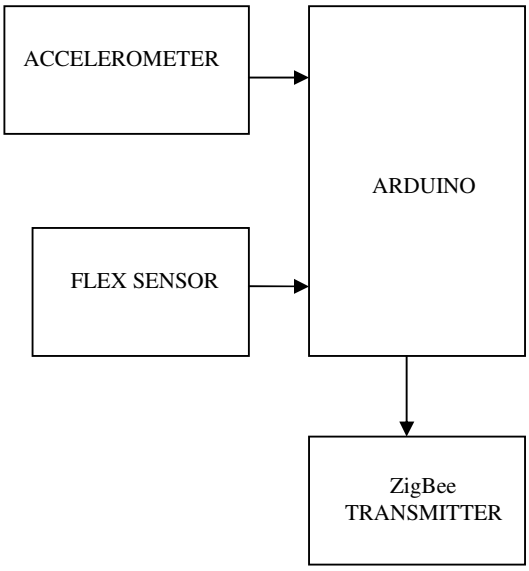

Fig:1a: pick and place robot Transmitter section

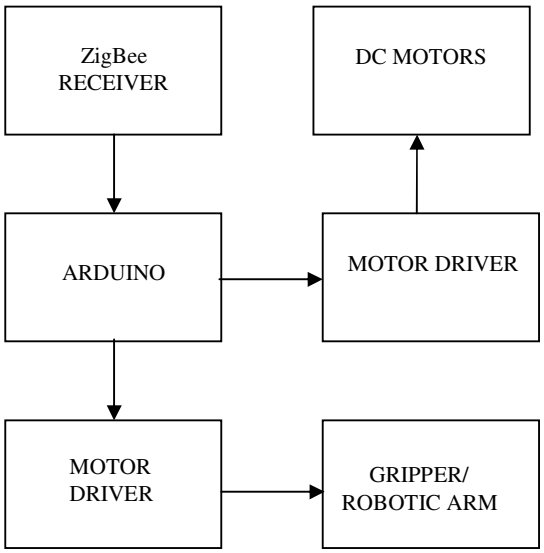

Fig:1b: pick and place robot Receiver section

Gesture Controlled Robot is divided into two sections: 1. Transmitter part and 2. Receiver part. In transmitter part an accelerometer, flex sensor and a transmitter unit is used. As we know that accelerometer gives an analog output so here we need to convert this analog data in to digital. For this purpose we have used 4 channel comparator circuit in place of any ADC. By setting reference voltage we gets a digital signal and then apply this signal to HT12E encoder to encode data or converting it into serial form and then send this data by using ZigBee/XBee transmitter into the environment. At the receiver end we have used zigbee receiver to receive data and then applied to HT12D decoder. This decoder IC converts received serial data to parallel and then read by using arduino. According to received data we drive robot by using DC motors in forward, reverse, left, right and stop direction and pick and place the object.

B Working Principle

Gesture controlled robot moves according to hand movement as we place transmitter in our hand. When we tilt hand in front side, robot start to moving forward and continues moving forward until next command is given. When we tilt hand in backward side, robot change its state and start moving in backwards direction until other command is given. When we tilt it in left side Robot get turn left till next command. When we tilt hand in right side robot turned to right. And for stopping robot we keeps hand in stable.

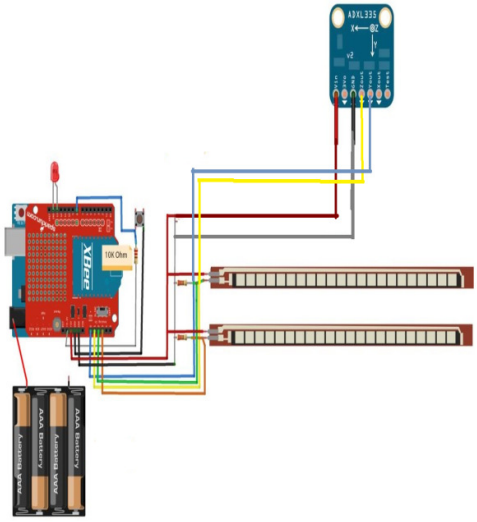

Fig:2 Transmitter schematic

Flex sensors are analog resistors. It works as variable analog voltage divider. Internally it consists of carbon resistive element with thin substrate. As substrate is flexible when it is bent, sensor produces resistive output which is equivalent to bend radius. The flex sensor provides greater accuracy for small movements also. Smaller the radius higher will be the resistance value. These flex sensors are mounted on human palm as user moves palm for particular applications flex sensor also bends by same amount as they are flexible. The changes due to tilt of accelerometer are in forward, backward i.e. X-axis, left, right i.e. Y-axis and up, down i.e. Z-axis. Accelerometer converts deflection into proportionate voltage & Analog to Digital converter convert analog signal into proportionate digital value. So according to positive & negative deflections motor either rotates in clockwise or in anticlockwise direction.

C Receiver schematic

In the transmitter side ZigBee/XBee transmit the signal and this signal is received by the receiver ZigBee/XBee and then fed to the microcontroller

which drives motor through motor driver to control movement of robot manipulator. The sensor glove reads values from the flex sensors and correspondingly sends them wirelessly using XBee protocol to the robotic hand.

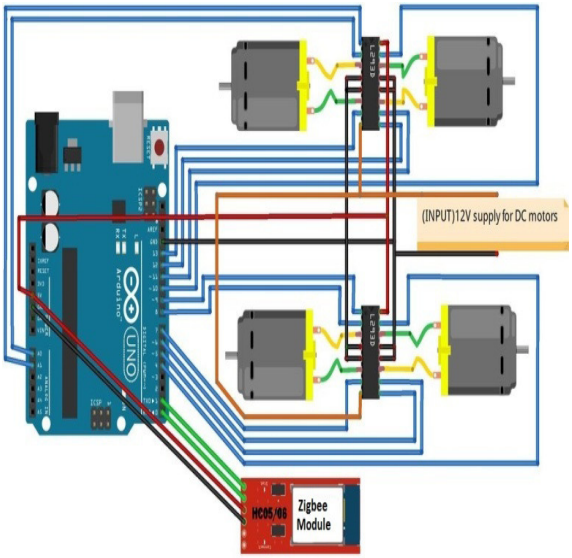

Fig:3 Receiver schematic

III. SOFTWARE IMPLEMENTATION

A Arduino IDE

The first time you run the Arduino software, it will automatically create a directory for your sketchbook. You can view or change the location of the sketchbook location from with the **Preferences** dialog. The source code for the IDE is released under the GNU General Public License, version 2. The Arduino IDE supports the languages C and C++ using special rules of code structuring. The Arduino IDE supplies a software library from the Wiring project, which provides many common input and output procedures.

B Uploading

Before uploading your sketch, you need to select the correct items from the Tools > Board and Tools > Port menus. The boards are described below. On the Mac, the serial port is probably something like /dev/tty.usbmodem241 (for an Uno or Mega2560 or Leonardo) or /dev/tty.usbserial-1B1 (for a Duemilanove or earlier USB board), or /dev/tty.USA19QW1b1P1.1 (for a serial board connected with a Keyspan USB-to-Serial adapter). On Windows, it's probably COM1 or COM2 (for a serial board) or COM4, COM5, COM7, or higher (for a USB board) - to find out, you look for USB serial device in the ports section of the Windows Device Manager. On Linux, it should be /dev/ttyACMx , /dev/ttyUSBx or similar. Once you've selected the correct serial port and board, press the upload button in the toolbar or select the Upload item from the Sketch menu. Current Arduino boards will reset automatically and begin the upload. With older boards (pre-Diecimila) that lack auto-reset, you'll need to press the reset button on the board just before starting the upload. On most boards, you'll see the RX and TX LEDs blink as the sketch is uploaded. The Arduino Software (IDE) will display a message when the upload is complete, or show an error.

C Serial Monitor

This displays serial sent from the Arduino or Genuino board over USB or serial connector, as shown in Fig.4.2. To send data to the board, enter text and click on the "send" button or press enter. Choose the baud rate from the drop-down menu that matches the rate passed to Serial.begin in your sketch. Note that on Windows, Mac or Linux the board will reset (it will rerun your sketch) when you connect with the serial monitor.

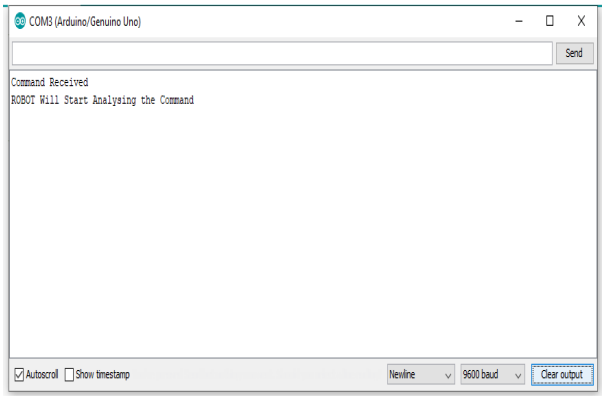

Fig:5 Serial monitor window

D Algorithm

Step1: Start
Step2: Initialize the ZigBee module
Step3:Initially set the predefined values for accelerometer and flex sensor
Step4:Read the input values from the hand gesture
Step5:Compare the input values with predefined values
Step6:After comparing encode the data
Step7:The encoded data is sent to the receiver
Step8:Encoded data will decode and passes to the motors
Step9:Based on the movements the robot will pick and place the object
Step10:Stop

E Flowchart

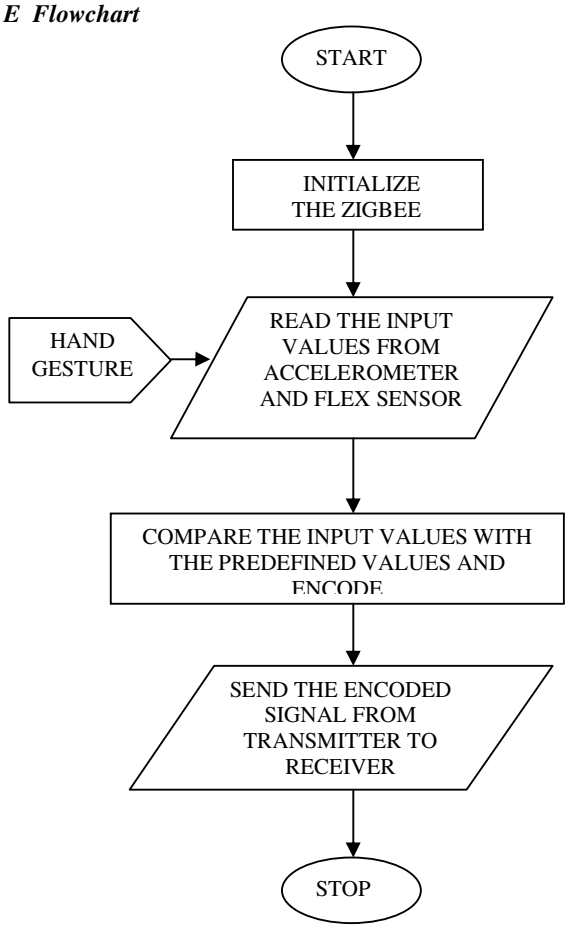

Fig:6 Flowchart

IV. RESULT AND DISCUSSION

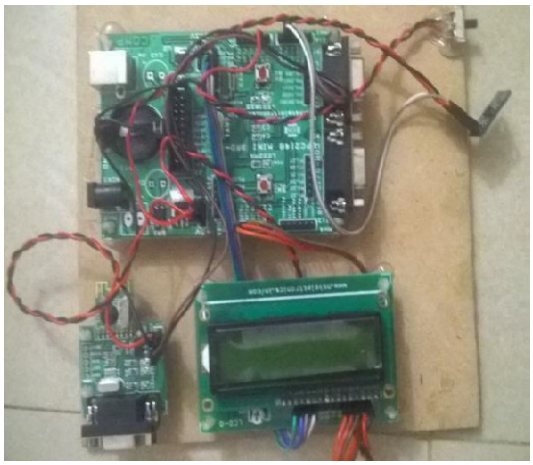

Fig:7 Transmitter module

Based on hand movements with holding accelerometer inside, changing the movement robot works as follows: forward: Robot moves in forward direction. In reverse: Robot moves in reverse direction. In left: Robot moves in left direction In right: Robot moves in right direction. We are placing two flex sensors for two different fingers. If the finger1 bend forward means robot arm will open and if the finger1 bend backward means robot arm will close. If the finger2 bend forward means robot arm will pick the object .And if the finger2 bend backward means robot arm will place the object.

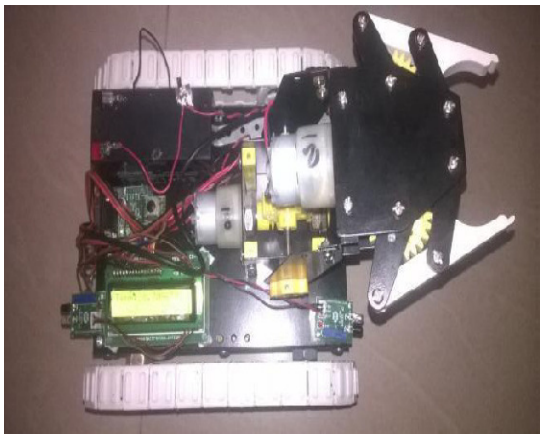

Fig:8 Receiver module

VI.CONCLUSION

The objective of this paper has been achieved with developed hardware and software for an flex sensor and accelerometer controlled robotic arm. From observations it is clear that movement of arm and car is precise, accurate, and is easy to control and user friendly to use .This robot control method is expected to overcome the problem such as placing or picking object that is away from the user or picking any hazardous object in a very fast and easy manner. This type of the hand gesture technology can be used where the humans are unable to sustain in the difficult or harsh environments. This might reduce some of the labour, that is used in industry and also the life risk factor.

ACKNOWLEDGMENT

We are very grateful to our Head of the Department of Electronics and Communication Engineering, Mr.D.Kishore, M.tech,(Ph.D) , Associate Professor, who helped us in choosing a research area Embedded Systems that has enlightened our thinking skills and laid a foundation for the completion of this paper. We express our sincere thanks to Dr. T.K. Ramakrishna Rao, M.Tech, Ph.D Principal of Aditya College of Engineering And Technology for providing appropriate environment required for our work. We also express our gratitude to college management and all those who have indirectly helped us in completion of this work.

REFERENCES

1. *Gesture Controlled Pick and Place Robot Prateek Pal , Amrit Mishra , M.C. Srivastava, Ashwani Sharma,UG Scholar, Assistant Professor,Mechanical and Automation Engineering Amity University, Lucknow, India.*

2. *International Journal of Advanced Technology in Engineering and Science Volume No.03, Issue No. 04, April 2015 HAND GESTURE CONTROLLED PICK AND PLACE ROBOT Prof.R.R. Itkarkar , Dixit Rohan , PattewarBalaji , Deshmukh Saurabh Professor, Student, RSCOE Pune, (India).*

3. *International Journal for Research in Applied Science & Engineering Technology (IJRASET) Volume 6 Issue III, March 2018 Hand Gesture Controlled Robot Using Arduino Ms.Asmita Jadhav , Ms. Deepika Pawar , Ms.Kashmira Pathare , Ms.Prachi Sale , Prof.R.Thakare, Department of Electronics and Telecommunication, Bharati Vidyapeeth College Of Engineering, Belpada, Navi Mumbai.*

4. *International Research Journal of Engineering and Technology (IRJET) Volume: 05 Issue: 04 Apr-2018 Robotic Vehicle Movement and Arm Control through Hand Gestures using Arduino N Meenatchi Sundaram, R Shiva Rama Krishnan, T K Suraj Kamal, J Rajeswari, UG Students,Department of Electrical and Electronics Engineering, Velammal College of Engineering and Technology, Madurai.*

5. *International Journal of Innovative Research in Science, Engineering and Technology , Vol. 4, Issue 6, June 2015 ,Gesture Controlled Mobile Robotic Arm Using Accelerometer Vivek Bhojak, Girish Kumar Solanki , Sonu Daultani, Associate Professor, Department of Electronics and Communication, Anand International College of Engineering, Jaipur, Rajasthan, India.*

6. *IRA-International Journal of Technology & Engineering ISSN 2455-4480; Vol.07, Issue 01 (2017) Gesture Control of Robotic Arm Dharshan Y , Vivek S , Saranya S , Aarthi V.R , Madhumathi T,Assistant Professor, Department of EIE Sri Ramakrishna Engineering College, Coimbatore, India*

7. *International Journal of Advance Engineering and Research Development Volume 5, Issue 05, May -2018 Voice and gesture recognition of pick and place robot using pic microcontroller Dr Naveen B , Poornesh.P , Priya.U , Rekha.D , Suraj.H.D,Associate Professor ,U.G.Student, BGSIT Visveswaraya Technological University, Karnataka, India.*

8. *International Journal of Engineering Research & Technology (IJERT) Vol. 6 Issue 04, April-2017 Design and Implementation of Robotic Hand Control Using Gesture Recognition Sakshi Sharma, Shubhank Sharma, Piyush Yadav UG Student , Assistant Professor, Department of Electronics and Communication Engineering G.L.Bajaj Institute of Technology and Management Greater Noida, India.*