DRIVER DROWSINESS MONITORING SYSTEM USING RASPBERRY PI

Aruna Jyothi Chamanthula[1], Venkata Kiran Sanipini[2]
1, 2 (Electronics and Communication Engineering, Aditya College of Engineering & Technology, Surampalem)
aruna.24819@gmail.com
kiranyrpm@gmail.com

Abstract

In recent year's driver fatigue is one of the major causes of vehicle accidents in the world. one way of measuring driver fatigue is measuring the opening and closing state of eye of the driver i.e. drowsiness. So it is very important to detect the drowsiness of the driver to save life and property. This Paper is aimed towards developing a drowsiness Monitoring system. This system is a real time system which captures image continuously and measures the state of the eye according to the specified algorithm and gives warning if required. This can give the exact condition of the driver. The per closure value of eye is considered for detection of drowsiness. So when the closure of eye exceeds a certain value then it identifies driver to be sleepy. To implement this design several OpenCv libraries are used including Haar-cascade. The entire system is implemented using Raspberry-Pi.

Index Terms—Drowsiness, Raspberry pi, Eye aspect ratio, Buzzer

I.INTRODUCTION

Driver drowsiness is the main cause of road accidents which leads to deaths or unintentional injuries throughout the world. Due to these daily 100,000 crashes reported by police and many injuries and thousands of death cases. But it is necessary that how can we Monitor driver drowsiness?

This paper presents that there is a need to develop a system that will monitor and notify a driver of her/him bad psychophysical condition, which could significantly reduce the number of fatigue-related car accidents. However, the most tough job in development of such a system are related to fast and proper recognition of a driver 's eye state. Due to the increasing amount of vehicles on the road, which translates into the road accidents directly, equipping a car with the fatigue detection system is a must. One of the possibilities to develop such a system is to use vision-based approach. With the rapid development of image analysis techniques and methods, and a number of ready Component-on-the-Shelf solutions (e.g. high resolution cameras, embedded systems, sensors), it can be envisaged, that introducing such systems into widespread use should be easy. Car drivers, truck drivers, taxi drivers, etc. should be allowed to use this 42 Solution to increase the safety of passengers, other road users and the goods they carry.

The second part of the system is to analyze the eye movement. Common methods used to detect a motion in video systems are differential and gradient methods. Differential methods determine the difference between the subsequent image frames. This allows determining the brightness level in the grayscale or the color intensity of the pixel during the frame changes. So, the movement of the object can be detected .in order to improve movement detection, the moving object should contrast with the background

II.BLOCK DIAGRAM

The driver drowsiness detection system is used in vehicles to detect the drowsiness which detects bad psychophysical condition. This detection system is used to detect the drowsiness and it alerts the driver using buzzer and after buzzer sound also if it detects drowsiness it will stop the engine so that we can avoid accidents.

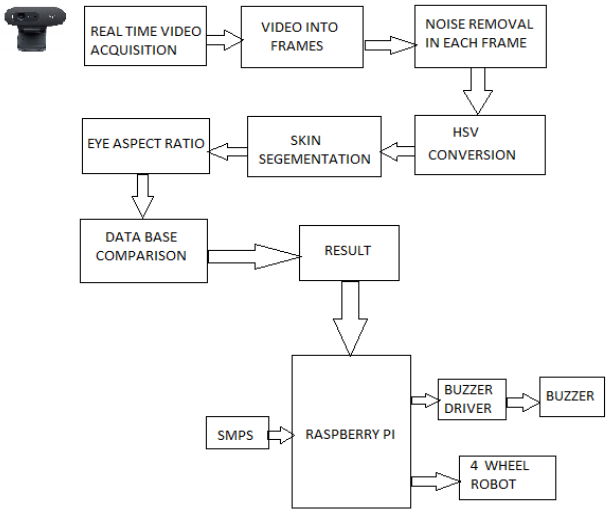

Fig 1. Block Diagram

Block diagram includes the Raspberry pi, Digital Camera, dc motor, relay, battery dc 12v as hardware components. This drowsiness detection system uses Raspberry pi as a processor which performs all the operations and the camera which is used to capture the video of the eye movement of driver. It continuously detects the eye movement and it processes the video into frames for detecting the eye aspects ratio. If it exceeds threshold value which stored in data base, those results are continuously transmitted to the raspberry pi and from that to buzzer which connected to it will alert the driver if same case repeats it stops the engine or the connected 4-wheel robot.

1. *Raspberry pi*

Raspberry pi Processor speed ranges from 700 MHz to 1.4 GHz for the Pi 3 Model B+; on-board memory ranges from 256 MB to 1 GB RAM. Secure (SD) cards in Micro SDHC form factor (SDHC on early models) are used to store the operating system and program memory. The boards have one to four USB ports. For video output, HDMI and composite video are supported, with a standard 3.5 mm tip-ring-sleeve jack for audio output. Lower-level output is provided by a number of GPIO pins

2. *Web Camera*

Utilizing a web camera introduced inside the automobile we can get the picture of the driver. Despite the fact that the camera creates a video clip, we have to apply the developed algorithm on each edge of the video stream. This paper is only focused on the applying the proposed mechanism only on single frame. The used camera is a low cost web camera with a frame rate of 30 fps in VGA mode. Logitech Camera is used for this process is shown in figure

Fig 2. Web Camera

3. *Buzzer*

The Buzzer is an electronic component which is used to make an alarm sound. We call it as piezo buzzer because it is a piezo electronic component. It is a digital component. It has two polarities as positive and negative polarity. The positive polarity is connected

Fig 3. Buzzer

4. *Battery 12v dc*

A battery is a device consisting of one or more electrochemical cells with external connections provided to power electrical devices such as flashlights, smart phones, and electric cars. When a battery is supplying electric power, its positive terminal is the cathode and its negative terminal is the anode.

The terminal marked negative is the source of electrons that will flow through an external electric circuit to the positive terminal. When a battery is connected to an external electric load, a redox reaction converts high- energy reactants to lower-energy products, and the free-energy difference is delivered to the external circuit as electrical energy.

Fig 4.Dc Battery

III. FLOWCHART

This flowchart consists of every step of drowsiness detection system. By seeing that we can know what is happening and the overall information about the bad psychophysical condition

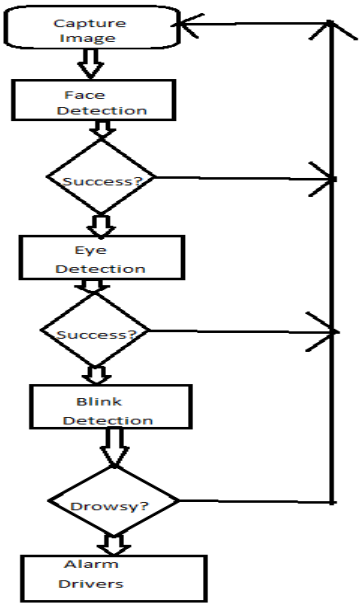

Fig 5. Flowchart of Drowsiness detection system

The following are the steps for a fall detection system:

Step1: Start
Step2: Camera captures the image or Video it is a continuous process
Step3: It detects the face of the driver and further process the image

Step4: Eye movement is detected
Step5: It detects the eye aspects ratio or blink detection if it exceeds threshold value it detects as driver was drowsy
Step6: if it crosses blink ratio alarm or buzzer will below

IV RESULTS

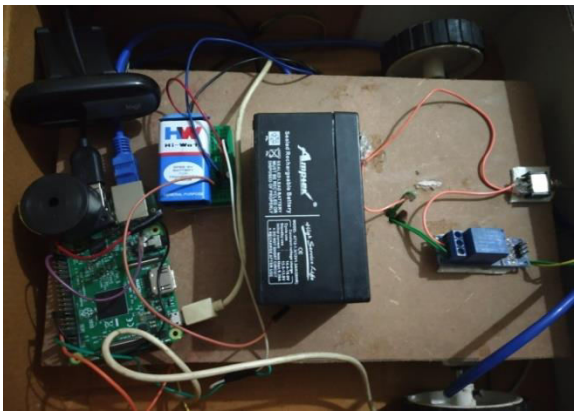

Fig 6. Drowsiness Monitoring System

Fig 7.Eye opening movement result spotted on the screen

Fig 8. Eyes closure movement result spotted on the screen

V.CONCLUSION

Implementation of drowsiness detection with Raspberry Pi was done which includes the following steps: Successful runtime capturing of video with camera. Captured video was divided into frames and each frame was analyzed. Successful detection of face followed by detection of eye. If closure of eye for successive frames were detected, then it is classified as drowsy condition else it is regarded as normal blink and the loop of capturing image and analyzing the state of driver is carried out again and again. In this implementation during the drowsy state the eye is not surrounded by circle or it is not detected and corresponding message is shown. If the driver is not drowsy then eye is identified by a circle and it prints 1 for every successful detection of open eye.

REFERENCES

[**[1]** Driver Drowsiness Detection based on Multimodal using Fusion of Visual-feature and Bio-signal Hyung-Tak Choi ; Moon-Ki Back ; Kyu-Chul Lee 2018 International Conference on Information and Communication Technology Convergence (ICTC)

[2]Detecting Driver Drowsiness Using Wireless Wearables Brandy Warwick ; Nicholas Symons ; Xiao Chen ; Kaiqi Xiong 2015 IEEE 12th International Conference on Mobile Ad Hoc and Sensor Systems

[3]A review on driver drowsiness based on image, bio-signal, and driver behavior Bagus G. Pratama ; Igi Ardiyanto ; Teguh B. Adji
2017 3rd International Conference on Science and Technology - Computer (ICST)Year: 2017

[4]A Fuzzy Based Method for Driver Drowsiness DetectionOmar Rigane ; Karim Abbes ; Chokri Abdelmoula ; Mohamed Masmoudi
2017 IEEE/ACS 14th International Conference on Computer Systems and Applications (AICCSA)

[[5] Driver Drowsiness Detection Using Skin Color Algorithm and Circular Hough Transform Mandalapu Sarada Devi ; Monali V. Choudhari ; Preeti Bajaj 2011 Fourth International Conference on Emerging Trends in Engineering & Technology

[6] Eye tracking based driver fatigue monitoring and warning system Hardeep Singh ; J. S. Bhatia ; Jasbir Kaur India International Conference on Power Electronics 2010 (IICPE2010)