RESEARCH ARTICLE OPEN ACCESS

Linear variable Differential Transformer (LVDT) Application for Industrial Measurement System

Swapnil P Jagale[1], Prof.Manoj Kumar[2]
[1, 2] Department of Electronics and telecommunication
Sahyadri Valley College of Engineering & Technology, Rajuri, Pune, Maharashtra, India

Abstract:

LVDT stands for Linear Variable Differential Transformer is transducer which converts linear motion into equivalent electrical signal. LVDT sensor is well known for high accuracy and durability. In our proposed system, we designed digital embedded electronic gauging system. In which LVDT feds electrical signal equivalent to measured physical quantity to process by microcontroller. Processed result is displaced and drives the relay.

Keywords — **LVDT, Serial RS232**

I. INTRODUCTION

Quantity measurement is an essential part of today's life, without measurement no one can deal today.
In industries, on production lines many parameters needs required to measure frequently with high accuracy and with high speed measurement.
Digital measurement system provides high accuracy and productivity. Our proposed system specify designing and installation of advance electronic embedded digital measurement scale using high accuracy ADC IC (12-Bit) and microcontroller.

II. EASE OF USE

The system provides user friendly interaction between mechanical production process and digital measuring system.

A. Objective

Digital measurement system provides high accuracy and productivity. Our proposed system specifies designing and installation of advance electronic embedded digital measurement scale using high accuracy ADC. User can provide upper limit or lower limit of measurement of desire job. Accuracy of dimension can be maintained by storing master dimensioned jog within device memory.

B. Aim

The LVDT sensor is used to measure physical quantity. Helps to measuring physical quantities like height, width and depth of the jobs on production line. Measured quantity status highlighted by Multi-colour display. We can define specific colour reading for measurement is under range, out of the range and for measurement is out of the range but reworking is available. We can decide in the limit setting, upon the maximum and minimum tolerances. Accordingly relay contacts will turn ON or OFF

C. Block Diagram

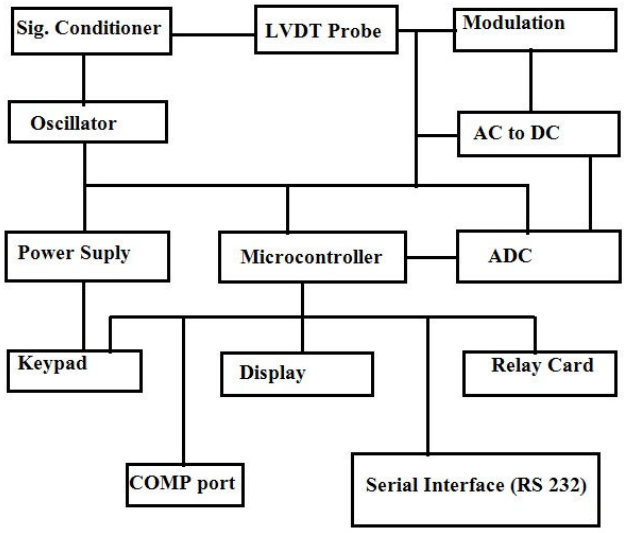

D. Block Diagram Details

The LVDT sensor probe is connected to five pin probe connector. Sinusoidal input waveform from LVDT sensor is amplified by amplifier ICs, filtered by capacitive filters and transformed in to the DC waveform, which is proportional to a physical measured quantity.

This sinusoidal signal is transferred in to a digital format by ADC, an analog to digital converter IC. Microcontroller processed that signal and flashed on a display panel. TTL level voltage to RS232 Trans-receiver is used to data exchanging with an external devices.

Amplifier Oscillator:

Oscillator part generates the sine wave which required to driving the LVDT sensor. A transistor RC phase-shift oscillator is used to produce oscillations. These oscillations get buffer by an audio amplifier circuit and connected to the primary winding of DT (driver transformer). Secondary output of transformer is adjusted to 4 volt peak to peak, freq 10kHz AC and given to LVDT sensor.

E. LVDT Transducer

LVDT (Linear Variable Differential Transformer) works on the principle of mutual induction and the displacement which is a physical energy is converted into an electrical energy.

LVDT consists of a cylindrical tube where it is surrounded by one primary winding in the centre of the former and the two secondary windings at the sides. The number of turns in both the secondary windings are exact equal, but they are opposite to each other, i.e., if the left secondary windings is in the clockwise direction, the right secondary windings will be in the anti-clockwise direction, hence the net output voltages will be the difference in voltages between the two secondary coil. The two secondary coils are represented as C1 and C2. Esteem iron core is placed in the centre of the cylindrical tube which can movable in to and fro type motion. The AC voltage is 5 to 12V, proportional to physical movement and the with operating frequency is given by 50 - 400 HZ.

CONCLUSIONS

In conventional Electronic Gauging System method have limitation in improving the accuracy and in throughput rate quantity. This proposed system, an optional method has been explored to overcome the limitations. System supports high accuracy and fine throughput rate quantity of product measurement. Hence this device is better option on low cost for industrial application. The displacement sensor like LVDT is useful in different area of engineering and testing. The proposed device is a definitely cheap structure for the LVDT sensor.

REFERENCES

[1] Shan Yuekang; Zhao Jin; Hangzhou, China ; Zhao Jieang "Notice of Retraction Design on the Measuring System of Bearing Thickness by LVDT", Intellige nt Computing and Cognitive Informatics (ICICCI), 2010 International Conference on 22-23 June 2010.

[2] Ruiting Li ; Haima Yang; Qingzhong Wei; Jin Liu "The study of high accuracy capacitive displacement sensor used in non-contact precision displacement measurement using LVDT", Electronic Measurement & Instruments, 2009. ICEMI '09.

[3] Hapenciuc, Svasta, P.M. "Inertial bridge with on board signal processing using LVDT", Design and Technology of Electronics, (SIITME) 2009 19th International Symposium for 17-20 Sept. 2012.

[4] Tothert, F.N. ; G.C.M. A low-cost, accurate and fast capacitive displacement sensor with microcontroller interfacing Instrumentation and Measurement Technology Conference, 1992. IMTC '92., 9th IEEE 12-14 May 1992.

[5] Md. Saifulddin Islam, Md. Liakot Ali, Rifat Zaman, Zubaer Md Tanvir Low-Cost USB-Based Data-Logger for LVDT Sensor 2015 International Conference on Industrial Engineering and Operations Management Bali, Indonesia, January 7 – 9, 2015.

[6] JjinhuiFantt ; SoongminJiat ; Wei Lu ; Zhihonge Wangg "Application of LVDT transducer and sensor data acquisition system based on PCI-171", Computer Science and Automation Engineering (CSAE), 2012 IEEE International Conference on (Volume:3)

[7] Massi, S.Danzeca, TR.Losito, P.Peronnard, R.Secondo, G.Spiezia "A high precision radiation-tolerant LVDT based conditioning module", Nuclear Instrument and Method in Physics, 3 Feb 2015.

[8] T.Drumeall; Romania ; Svasta, R.Blejan, M. "LVDT Sensor Device for Measuring Loads on Bearings"

[9] "Industrial Modelling and simulation of an inductive displacement sensor for mechatronic systems based on LVDT", Electronics Technology (ISSE), 2010 32nd International Spring Seminar on 12-16 May 2012

[10] Rasolo fondraibe, PottierB.; Marconnet P.; Chiementin, X. "Capacitive Sensor Device for Measuring Loads on Bearings", Sensors Journal, IEEE (Volume:14 , Issue: 6) 27 Apr 2012.

[11] Pratiksha Sharma1,P. K. Bordal "Design of LVDT Based Digital Weighing System for industrial App", International Journal of Electronics and Computer Science Engineering. 2012.

[12] Lakkoju P., N.P. Gudlar, S.Mantravadit, "AVR USB DATA ACQUISITION USING LVDT", Electronics Computer Technology (IICECTE), 2013.

[13] Danisin, "Simulation of DC interfering magnetic-field effects on the LHC collimators LVDT positioning sensors", J. Federico, P. Naples, Italy,2011.