Water Quality Assurance System

Varsha Venkatachalam
Department of Computer Engineering
SIES Graduate School of Technology
Mumbai,India
varsha1497@gmail.com

Vidhya Sukumaran
Department of Computer Engineering
SIES Graduate School of Technology
Mumbai,India
vidhya.sukumaran97@gmail.com

Abhinandan Gupta
Department of Computer Engineering
SIES Graduate School of Technology
Mumbai, India
guptaabhinandanfc09@gmail.com

Rahul Ghorpade
Department of Computer Engineering
SIES Graduate School of Technology
Mumbai, India
rahulghorpade741@gmail.com

Prachi Shahane
Department of Computer Engineering
SIES Graduate School of Technology
Mumbai, India
prachi.shahane@siesgst.ac.in

Abstract—*To assure the safe supply of drinking water, the quality should be monitored in real time, for that purpose a modish IoT based water quality assurance has been proposed. In this project, we layout the design of IoT based water quality monitoring system which oversees the quality of water in real time. This system inheres few sensors which calibrates the water quality parameters such as pH, temperature, turbidity. The measured values from the sensors are processed by the microcontroller and are remotely routed to the client system using IoT protocols. Decisively the sensors data can be perceived on the client side in real time using cloud computing. The proposed project is also integrated with an android application to monitor the quality in real time using IoT.*

Keywords *(Ph,Turbidity,Temperature,Real Time, IoT,)*

I. INTRODUCTION

Water is one of the most important resource for life on earth. Currently people yearn something to make their life effortless. Water quality monitoring is astonishingly useful to keep our environment healthy and viable. Many contagious diseases are waterborne. Tank is one of the containers used to store water. It was espied that main cause of abasement of water is due to the growth of microorganisms in tank. There is a perpetual need of remote monitoring the water in real time. However, the traditional approach of water quality monitoring based on collection of water samples and successive analyses in laboratories is overpriced, protracting and does not allow concurrent and up-to-date monitoring of the water quality.

This project principally targets to develop an indigenous, staunch, extensible WSN water quality monitoring system for in-situ monitoring of the remote water quality across a wireless sensor zone. Wireless Sensor Networks (WSNs) presents a new model for sensing and to transmit information from miscellaneous environments, to support many diverse applications. WSN provide significant advantages both in distributed intelligence as well as in cost. On the other hand, installation and maintenance expenses are scaled down as it does not require any wiring. Wireless sensor network for a water quality monitoring is composed of coordinator and number of sensor nodes with networking competence which are deployed at different tanks within the college. Each sensor node incorporates a microcontroller, a wireless network connection module and water quality sensors that are able to frequently read the water quality parameters such as electrical conductivity, pH, temperature and turbidity. The sensed data is processed by the microcontroller and are sent to the data center where the data is logged into central server. GrapHic User Interface (GUI) is provided for users to analyze water quality data when water quality detected is below standards. The cataloged data can be evaluated using various simulation tools for future correspondence and actions to evaluate the reliability, expediency and validness of the proposed monitoring system.

II. SCOPE

During our project period, we intend to make a Water Quality Assurance System for the the college where we would install it in the water purifiers on one of the floor and then we can scale it further to all the floors and there will be real time monitoring and feedback system in case of impure water.After studying the feasibility we intend to make it on a larger scale where it would serve larger scope since the system is automatic and low in cost and does not require manpower.

III. LITERATURE REVIEW

We have studied the entire water quality monitoring methods, sensors, embedded design, and information dissipation proceedings. The Sensor Cloud domain is deliberated. While inevitably improving the water quality is not attainable at this point, productive practice of technology and economic practices can guide us to boost the water quality and awareness among people.[4] The differentiating traits of sensor networks which have a direct impact on the hardware design of the nodes at at most four levels: power source, processor, communication hardware and sensors.[2]

A mobile cloud computing technology is an effective solution to process various types of collected data and reciprocate with the appropriate answer in real time situations where the quick response is very important.[2] We build a multifunctional integrated sensors system.

The system comprises of physiochemical sensors that can measure the physical and chemical properties of the water such as temperature, turbidity and pH. By the sensed data, water impurities are detected. Cloud computing is used to view the processed data and control the water flow.[7] The networked sensors will transmit the sensed data through wireless technologies to a Cloud for converting and notifying the catalogued users to take the appropriate action.[5]

IV. METHODOLOGY

The architecture to be followed in our project is the Thing-Edge-Fog architecture. The architecture in our project is a crucial aspect, giving it a proper structure and function channeling. The sensors used in the project are categorized in the THING division. These sensors are exposed to the experimental environment (inside the water tank) and the readings at every point of time is collected by the sensors. An EDGE generally refers to a node or an independent unit, but in our project, the Arduino UNO to which the sensors are connected acts as the EDGE. It processes the values according to the given parameters after taking the readings from the sensors. The data processing is done there itself. This processed data is now ready to be broadcasted over the cloud and is available to compute to our desired output. This data flow from the microcontroller to the cloud and the services offered at the cloud level is categorized under the FOG division. This complete process completes and justifies the Thing-Edge-Fog architecture as proposed.

A. SYSTEM ARCHITECTURE

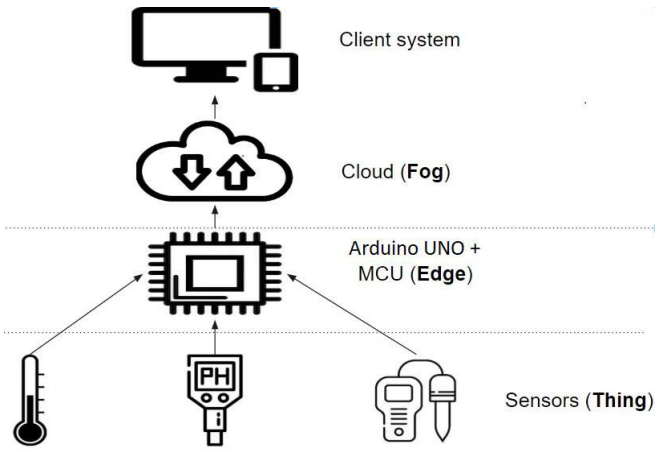

Fig. 4.1 System Architecture

B. PROPOSED SYSTEM

"Water Quality Assurance System" is an IoT based real-time monitoring system to check the degree of purity of water and send an immediate response to the authorized person when impurity is detected. This detection triggers when the water quality parameters are not satisfied and the necessary action is carried out by the client.

Modules are briefly categorized as:

Hardware implementation:- In this module all the sensors and hardware devices are interfaced together and the structure of the module is created.[6]

Data Processing:- In this module, the readings from the sensors are recorded and the data is processed according to our target parameters and the trigger points are set. Basically, the software implementation and data processing is done in this module.[5]

Cloud Functionality:- This module is the main aspect in wireless sensor network. Here the processed data from the IoT module is transferred directly over the cloud to the client system/server, where the client can use the data as required.[3]

Website implementation:- In this module the data will be available to the client on the website. The output and final processed results will be directed to the website via cloud.

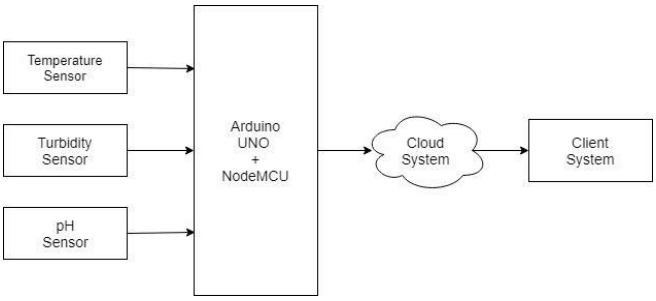

Fig. 4.2 Proposed System

Module 1: This is the deployed device which will be installed inside the water dispensing tanks. The sensors are interfaced on the microcontroller and these sensors act as the data reading devices. These sensors are the most important component in this module and are exposed to the environment (water dispensing tank). Only interfacing and hardware connections are carried out in this module. The sensors used are temperature sensor, pH sensor and turbidity sensor.[6] Temperature sensor senses how hot or cold a subject is. In our case, the temperature of water is measured and is displayed real-time on the website. We are considering 25 degree Celsius as the threshold temperature. pH sensor measures the level of acidity or alkalinity of given solution. The sensors have inbuilt potential electrodes to measure the pH value of given system. pH value for acidity is 0-7 pH and that of alkalinity is 7-14 pH. The ideal range for pure water is 6.5 pH to 8.5 pH. Turbidity sensor measures the amount of cloudiness present in solution. The sensor has an inbuilt LDR and LED, which serves the purpose of measuring the cloudiness. The table below gives the ideal value for each set of sensors.

Sensor	Ideal range of Drinking Water	Measuring Unit
Temperature	10 to 25	Degree Celsius
pH	6.5 to 8.5	pH
Turbidity	Less than 1	NTU

Module 2: In this module, the software implementation aspect of the IoT system is carried out. The sensors are interfaced to the Arduino UNO. Arduino UNO is an open source microcontroller board based on microchip Atmega328P microcontroller and developed by arduino cc. The NodeMCU has an inbuilt Wi-Fi module which helps in wireless and cloud computing. The compiler IDE used for the programming of NodeMCU is Arduino IDE and the programming language is object oriented java.[5] The NodeMCU is uploaded with the program of sensor interface with the microcontroller, the setting of trigger values, the reading and processing of the data as per the desired requirements.[7] The temperature sensor is the only sensor whose data is not processed for any kind of computation, but is only stored. This reading is continuously displayed on the website. The data from all other sensors are processed according to the desired configuration and then a feedback is given via LED's on the water dispensing unit.

Module 3: Cloud computing is one of the most adaptive and configurable resource in computer science in today's world. The extensive nature helps to store enormous amount of data in real-time and process it simultaneously.[3] Firebase is an open source cloud database platform and the dependencies can be implemented on NodeMCU. Our processed data from the microcontroller is taken and stored in real-time basis on the firebase database and the corresponding data is posted on the client system. If the quality parameter is not as desired (below or above the threshold), then the function is triggered and the client system is sent an immediate notification stating the problem and parameter readings of each sensor.[5]

Module 4:- This module is the web page of our water quality assurance system, which is to be present with the admin or client system. The web page will have all the sensors categorized per water dispensing unit. The real time readings will be reflected on the webpage. The webpage will have a sign-up and login for admin registration. It will also have a quick response technician guide which will help in contacting the technician and tracking the logs for all previous servicing and issues faced. A notification alert will be integrated will notify as soon as there is a sign of impurity, i.e.- the water quality parameter is not fulfilled.

V. DESIGN

The Flow of working of our project is shown in Figure 5.1

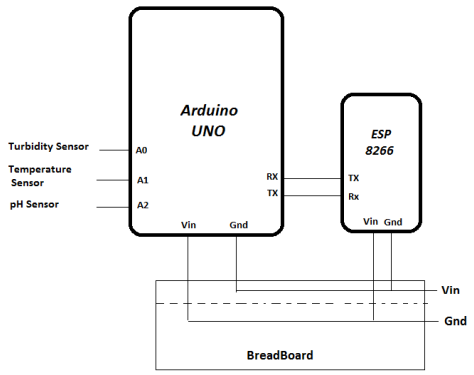

Fig 5.1

The whole design is based on IoT. There are basically two parts in our project. The hardware part and the software part. The hardware part consists of the sensors which give readings in real time and store it onto the Arduino UNO and the NodeMCU (ESP8266) which consists of the WiFi module for connection between the hardware and software part. The software part consists of the website which displays the real time value from the sensors and notifies the admin if the values go beyond or below the permissible limits.

VI. Results

The following results have been tested under varied conditions:

	Expected Values	Results
Turbidity Sensor	Less than 1	0.6-0.75 NTU
pH Sensor	7	6-8 pH
Temperature Sensor	10-25 °C	17-31 °C

VI. Conclusion

Water quality monitoring has become necessary aspect in environmental protection and human welfare. Automating the monitoring of water helps in keeping the quality of water in check With the help of sensors we are keeping a track of water quality parameters like Temperature,Turbidity and pH which helps us to determine if the water is fit for human consumption. The real time monitoring data is stored and generated via Firebase. Since the system is automatic therefore it is low in cost and does not require manpower for monitoring. It has widespread application and scope for expansion.

References

[1] Santosh Kumar and R. H. Goudar,"Cloud Computing Research Issues, Challenges,Architecture, Platforms and Applications: A Survey"International Journal of Future Computer and Communication, Vol. 1, No. 4, December 2012.

[2]Daniele Puccinelli,Martin Haenggi,"Wireless sensor networks: applications and challenges of ubiquitous sensing".Published in: IEEE Circuits and Systems Magazine (Volume: 5 , Issue: 3 , 2005)

[3] A. Alkandari, M. alnasheet, Y. Alabduljader and S. M. Moein, "Water monitoring system using Wireless Sensor Network (WSN): Case study of Kuwait beaches," 2012 Second International Conference on Digital Information Processing and Communications (ICDIPC), Klaipeda City, 2012, pp. 10-15.

[4]Nikhil Kedia"Water quality monitoring for rural areas- a Sensor Cloud based economical project," 2015 1st International Conference on Next Generation Computing Technologies (NGCT)

[5]Hany F. Atlam, Ahmed Alenezi, Abdulrahman Alharthi, Robert J. Walters, and Gary B. Wills,Electronic and Computer Science Dept., University of Southampton, Southampton, UK ,Computer Science and Engineering Dept., Faculty of Electronic Engineering, Menoufia University, Menoufia, Egypt,"Integration of Cloud Computing with Internet of Things: Challenges and Open Issues".

[6]Aaina Venkateswaran1, Harsha Menda P1, Prof Priti Badar,"An IoT Based System for Water Quality Monitoring"B. E Student, Department of ISE, New Horizon College of Engineering, Bengaluru, Karnataka, India,Vol. 5, Issue 4, April 2017.

[7]Gopavanitha, K., Nagaraju, S. (2017)." A low cost system for real time water quality monitoring and controlling using IoT". 2017 International Conference on Energy, Communication, Data Analytics and Soft Computing (ICECDS).