Dynamics Testing of an Industry Oriented Real Time DTC Induction Motor Drive Using Mat lab Simulink

Brahmananda Das
Department of EE
SpintronicTechnology and Advance Research, Bhubaneswar, Odisha, India

Email-brahman315@gmail.com

Abstract— **Direct Torque Control is a robust control technique which is insensitive to control parameters variations. This is a field oriented control technique in which the detail analysis of motor parameter are required as it is very difficult to measure the rotor time constant which is varies with temperature. Though it is a basic control technique, but it is essential for understanding this technique to develop the advance control algorithm using fuzzy logic control, neural network algorithm etc.**

A 149.2kw. 2pole cage induction motor of460 volts, 60 Hz, 1800 rpm and inertia constant 10 Kg.m^2 was tested using matlab simulink .The torque developed was 790 N.m according to parameter. To make a real time model I had chosen ac source resistance 0.0056Ω and inductance 0.15mH and model was developed by matlabR2016 simulink environment. A fan load was taken and the motor fed by a variable AC voltage and frequency produced by an inverter. The inverter used was the voltage source inverter (VSI) in the sense that this inverter was fed by a constant DC voltage. This constant voltage was provided by an uncontrolled diode rectifier and a capacitor (capacitive DC bus voltage).

After simulation I had found that From 0.02 second to 0.25 second, the fan speed increased because of the 600 N.m accelerated torque produced by the induction motor. When time was 0.25 second, the electromagnetic torque jumped down to 0 Newton-meter and the speed reduced because of the load torque opposed by the fan. When time was 0.5 second the motor torque developed a -600 Newton-meter torque and allowed braking of the fan. During braking mode, power was sent back to the DC bus and the bus voltage increasesed. As planned, the braking chopper limited the DC bus voltage to 700 V. At time is equal to 0.75 second, the electromagnetic torque jumped back to 0 N.m and the speed settleed around -10 rpm and reduced toward 0 rpm. It was found that the flux was attained around 0.8 Wb throughout the simulation. The flux and torque oscillation amplitudes are slightly higher than 0.02 and 10 N.m respectively . This was due to the combined effects of the 15 µs DTC controller sampling time, the hysteresis control, and the switching frequency limitation. I have used hysteresis modulation and PID controller. Here torque and flux from stator voltage and current.

Keywords— DTC, Field Oriented control ,VSI, DC BUS, Hysteresis Modulation.

1.Introduction

on October 20, 1984 direct self-control (DSC) was developed by Manfred Depenbrock in the US[3] and Germany. However, Isao Takahashi and Toshihiko Noguchi developed a similar control technique called as. DTC. The only difference between DTC and DSC is that the switching frequency of DTC is higher than DSC and DTC is applicable to low and medium rated machine drives whereas DSC is usually used for high rated machine drives. Since its mid-1980s DTC have been used for its simplicity and very fast torque and flux control response for high performance induction motor (IM) drive applications.DTC was then used in electric locomotives in German aqnd then it is used in ac drives and the applied to many more applications.

This is a robust control method.this is a very simple method because there is no requirement of pi regulator, coordinate transformations, current regulators and pwm signals generators.but the dynamic response is very fast,here coordinate reference frame taken as alpha/beta, control variable taken as torque and stator fluxthe performance of neural network, fuzzy and genetic algorithm based torque controllers can be evaluated as the various sensorless dtc techniques of im. These adaptive intelligent techniques are applied to achieve high performance decoupled flux and torque control.

II. Dynamic Braking

As the DC bus is provided by a diode rectifier, the drive doesn't have a bidirectional power flow capability and therefore cannot perform regenerative braking. In this model a braking resistor connected in series with a chopper ensures the braking of the motor-load system. This braking scheme is called dynamic braking. It is placed in parallel with the DC bus in order to prevent its voltage from increasing when the

motor decelerates. With dynamic braking, the kinetic energy of the motor-load system is converted into heat dissipated in the braking resistor.

II Modulation Techniques

It is possible to apply two types of modulation i.e.hysteresis modulation and space vector pulse width modulation (SVPWM).The hysteresis modulation is a feedback current control method where the motor current tracks the reference current within a hysteresis band. The following figure shows the operation principle of the hysteresis modulation. The controller generates the sinusoidal reference current of desired magnitude and frequency that is compared with the actual motor line current. If the current exceeds the upper limit of the hysteresis band, the upper switch of the inverter arm is turned off and the lower switch is turned on. As a result, the current starts to decay. If the current crosses the lower limit of the hysteresis band, the lower switch of the inverter arm is turned off and the upper switch is turned on. As a result, the current gets back into the hysteresis band. Hence, the actual current is forced to track the reference current within the hysteresis band.

III. Hysteresis Modulation

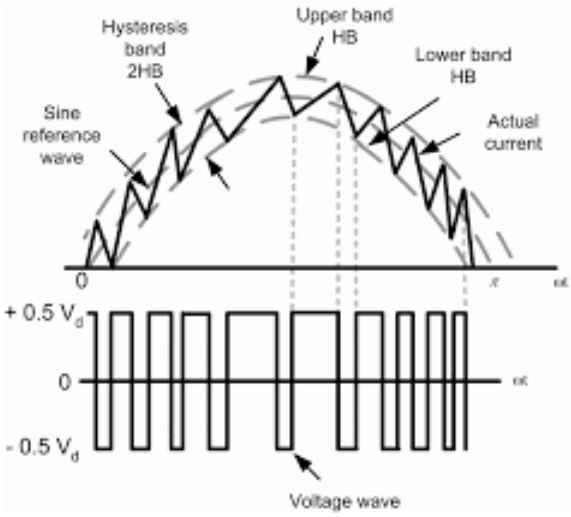

Fig-1.Hysteresis Modulation

. DTC drives utilizing hysteresis comparators suffer from high torque ripple and variable switching frequency.The space vector modulation technique differs from the hysteresis modulation in that there are not separate comparators used for each of the three phases. Instead, a reference voltage space vector V_s is produced as a whole, sampled at a fixed frequency, and then constructed through adequate timing of adjacent nonzero inverter voltage space vectors V_1 to V_6 and the zero voltage space vectors V_0, V_7. A simplified diagram of a VSI inverter is shown below. In this diagram, the conduction state of the three legs of the inverter is represented by three logic variables, SA, SB, and SC. A logical 1 means that the upper switch is conducting and logical 0 means that the lower switch is conducting. DTC drives utilizing hysteresis comparators suffer from high torque ripple and variable switching frequency.The space vector modulation technique differs from the hysteresis modulation in that there are not separate comparators used for each of the three phases. Instead, a reference voltage space vector V_s is produced as a whole, sampled at a fixed frequency, and then constructed through adequate timing of adjacent nonzero inverter voltage space vectors V_1 to V_6 and the zero voltage space vectors V_0, V_7. A simplified diagram of a VSI inverter is shown below. In this diagram, the conduction state of the three legs of the inverter is represented by three logic variables, SA, SB, and SC. A logical 1 means that the upper switch is conducting and logical 0 means that the lower switch is conducting.

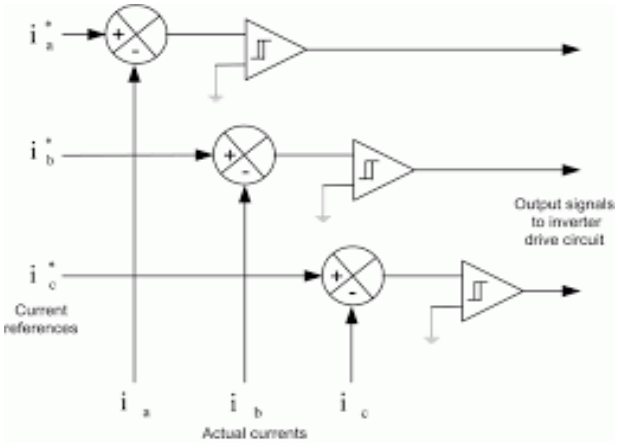

Fig-2.Hysteresis current controller

IV.VSI PWM Inverter

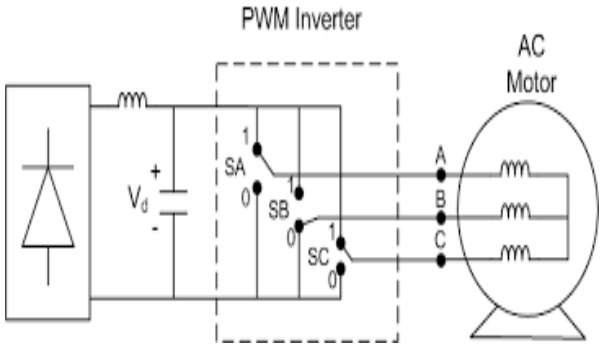

Fig-3Pwm Inverter

In this diagram, the conduction state of the three legs of the inverter is represented by three logic variables, SA, SB, and SC. A logical 1 means that the upper switch is ON and logical 0 means that the lower switch is ON.

The switching of SA, SB, SC results in eight states for the inverter. The switching states and the corresponding phase to neutral voltages are summarized in Inverter Space Voltage Vectors . The six active vectors are an angle of 60 degrees apart and describe a hexagon boundary. The two zero vectors are at the origin.

For the location of the V_s vector shown in Inverter Space Vector Voltages, as an example, the way to generate the inverter output is to use the adjacent vectors V_1 and V_2 on a part-time basis to satisfy the average output demand. The voltage V_s can be resolved as: V_a and V_b are the

$$V_b = \frac{2}{\sqrt{3}} V_s \cdot \sin\delta \qquad (1)$$

$$V_a = V_s \cdot \cos\delta - \frac{1}{2} V_b \qquad (2)$$

components of V_s along V_1 and V_2, respectively. Considering the period T_c during which the average output must match the command, write the time durations of the two states 1 and 2 and the zero voltage state as:

$$t_a = \frac{3}{2} \cdot \frac{V_a}{V_d} \cdot T_c \qquad (3)$$

$$t_b = \frac{2}{3} \cdot \frac{V_b}{V_d} \cdot T_c \qquad (4)$$

$$t_z = T_c - (t_a + t_b) \qquad (5)$$

Table-1 Inverter Space Vector

State	SA	SB	SC	Inverter Operation	Space Voltage Vector
0	1	1	1	Freewheeling	V_0
1	1	0	0	Active	V_1
2	1	1	0	Active	V_2
3	0	1	0	Active	V_3
4	0	1	1	Active	V_4
5	0	0	1	Active	V_5
6	1	0	1	Active	V_6
7	0	0	0	Freewheeling	V_7

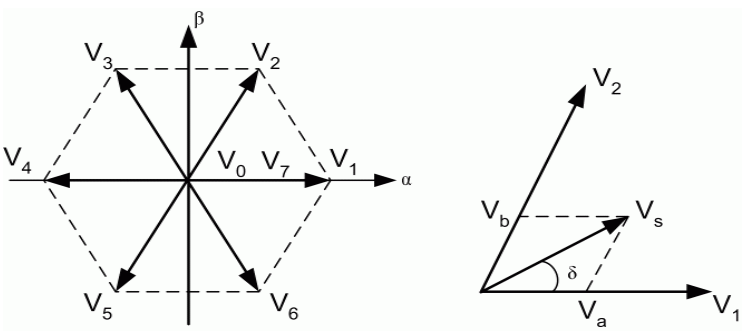

Fig-4space vector

VI.Flux-Oriented Control:

The construction of a DC machine is such that the field flux is perpendicular to the armature flux. Being orthogonal, these two fluxes produce no net interaction on one another. Adjusting the field current can therefore control the DC machine flux, and the torque can be controlled independently of flux by adjusting the armature current. An AC machine is not so simple because of the interactions between the stator and the rotor fields, whose orientations are not held at 90 degrees but vary with the operating conditions. You can obtain DC machine-like performance in holding a fixed and orthogonal orientation between the field and armature fields in an AC machine by orienting the stator current with respect to the rotor flux so as to attain independently controlled flux and torque. Such a control scheme is called flux-oriented control or vector control. Vector control is applicable to both induction and synchronous motors. We will see now how it applies to induction motors.

Considering the d-q model of the induction machine in the reference frame rotating at synchronous speed ω_e,

$$V_{qs} = R_s i_{qs} + \frac{d}{dt}\varphi_{qs} + \omega_e \varphi_{ds} \quad (6)$$

$$V_{ds} = R_s i_{ds} + \frac{d}{dt}\varphi_{ds} - \omega_e \varphi_{qs} \quad (7)$$

$$0 = R_s i_{qr} + \frac{d}{dt}\varphi_{qr} + (\omega_e - \omega_r)\varphi_{dr} \quad (8)$$

$$0 = R_r i_{dr} + \frac{d}{dt}\varphi_{dr} - (\omega_e - \omega_r)\varphi_{qr} \quad (9)$$

$$T_e = 1.5p\frac{L_m}{L_r}(\varphi_{dr} i_{qs} - \varphi_{qr} i_{ds}) \quad (10)$$

Where

$$\varphi_{qs} = L_s i_{qs} + L_m i_{qr} \quad (11)$$

$$\varphi_{qr} = L_r i_{qr} + L_m i_{qs} \quad (12)$$

$$\varphi_{ds} = L_s i_{ds} + L_m i_{dr} \quad (13)$$

$$\varphi_{dr} = L_r i_{dr} + L_m i_{ds} \quad (14)$$

The field-oriented control implies that the i_{ds} component of the stator current would be aligned with the rotor field and the i_{qs} component would be perpendicular to i_{ds}. This can be accomplished by choosing ω_e to be the speed of the rotor flux and locking the phase of the reference frame system such that the rotor flux is aligned precisely with the d axis, resulting in

$$\varphi_{qr} = 0 \Rightarrow \frac{d}{dt}\varphi_{qr} = 0$$

And

$$\varphi_{dr} = \varphi_r$$

which implies that

$$\omega_{sl} = (\omega_e - \omega_r) = \left(\frac{L_m R_r}{\varphi_r L_r}\right) i_{qs} \quad (15)$$

and that

$$T_e = 1.5p\frac{L_m}{L_r}(\varphi_r i_{qs}) \quad (16)$$

It also follows that

$$\frac{d}{dt}\varphi_r = -\left(\frac{R_r}{L_r}\right)\varphi_r + \left(\frac{L_m R_r}{L_r}\right) i_{ds} \quad (17)$$

The analogy with DC machine performance is now clear. The electric torque is proportional to the i_{qs} component, whereas the relation between the flux φ_r and the i_{ds} component is given by a first-order linear transfer function with a time constant L_r / R_r. You cannot directly measure the rotor flux orientation in a squirrel-cage rotor induction machine. It can only be estimated from terminal measurements. An alternative way is to use the slip relation derived above to estimate the flux position relative to the rotor, as shown.

Rotor Flux Position Obtained from the Slip and Rotor Positions:

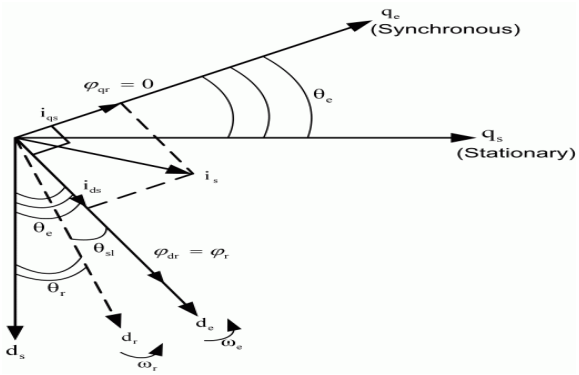

Fig-5 Rotor Flux Position

VI.Direct Torque Control

Though the field-oriented control is an attractive control method but it has a serious drawback that it requires deep rooted knowledge of the motor parameters and it is difficult to measure the rotor time constant as it varies with time .

So direct torque control method is a robust control first in estimating the machine stator flux and electric torque in the stationary reference frame from terminal measurements. The following relations are used

$$\varphi_{ds} = \int (V_{ds} - R_s i_{ds})dt \qquad (18)$$

$$\varphi_{qs} = \int (V_{qs} - R_s i_{qs})dt \qquad (19)$$

$$\hat{\varphi}_s = \sqrt{\varphi_{ds}^2 + \varphi_{qs}^2} \angle \operatorname{atan}\left(\frac{\varphi_{qs}}{\varphi_{ds}}\right) \qquad (20)$$

$$T_e = 1.5p(\varphi_{ds} i_{qs} - \varphi_{qs} i_{ds}) \qquad (21)$$

The estimated stator flux and electric torque are then controlled directly by comparing them with their respective demanded values using hysteresis comparators. The outputs of the two comparators are then used as input signals of an optimal switching table. The following table outputs the appropriate switching state for the inverter.

Table-2 Switching of Inverter Space Vectors

H_ψ	H_{Te}	S(1)	S(2)	S(3)	S(4)	S(5)	S(6)
1	1	V_2	V_3	V_4	V_5	V_6	V_1
	0	V_0	V_7	V_0	V_7	V_0	V_7
	-1	V_6	V_1	V_2	V_3	V_4	V_5
-1	1	V_3	V_4	V_5	V_6	V_1	V_2
	0	V_7	V_0	V_7	V_0	V_7	V_0
	-1	V_5	V_6	V_1	V_2	V_3	V_4

.

VI.MATLAB SIMULINK MODEL

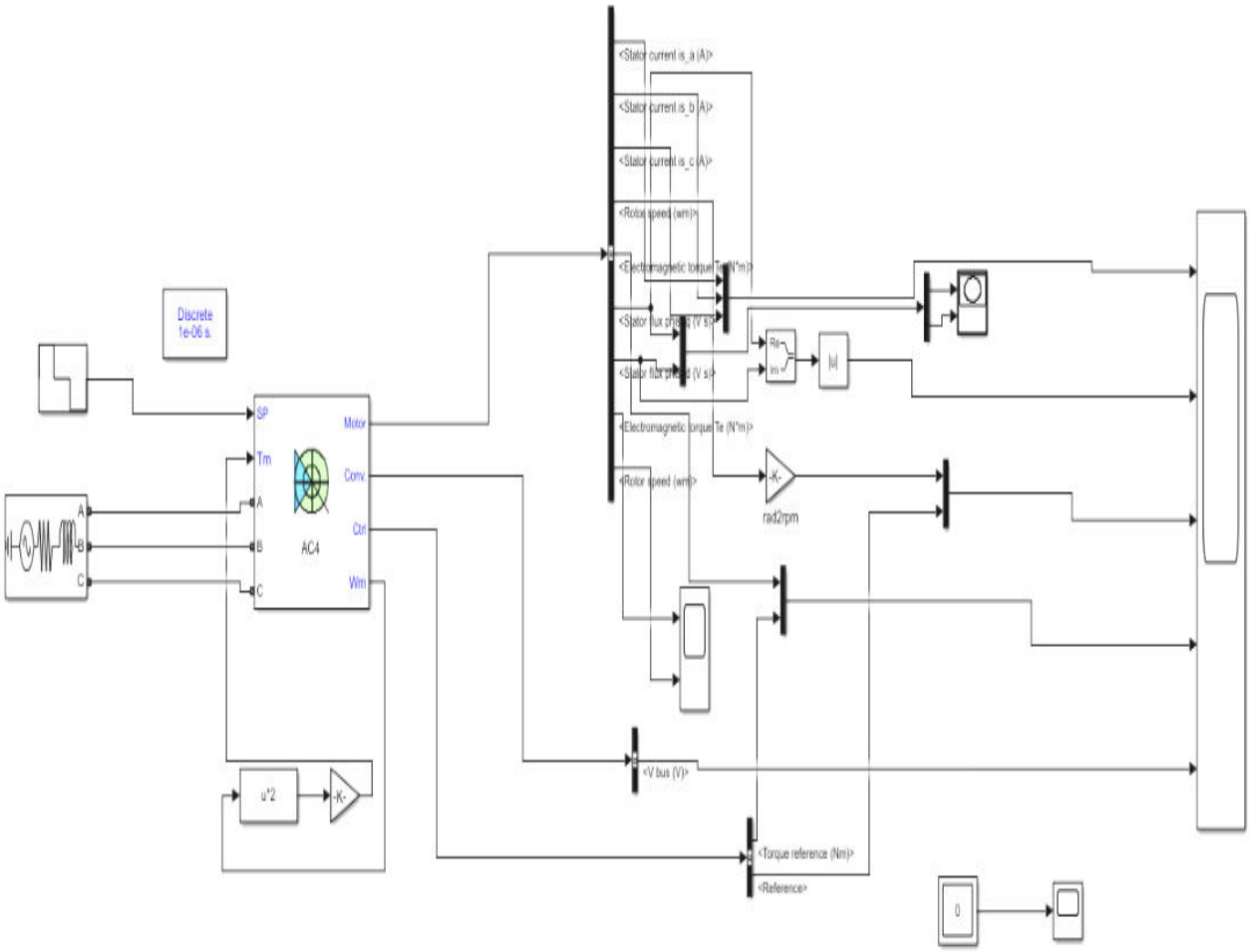

Fig-6 Entire Model of DTC

VII. Simulation Results

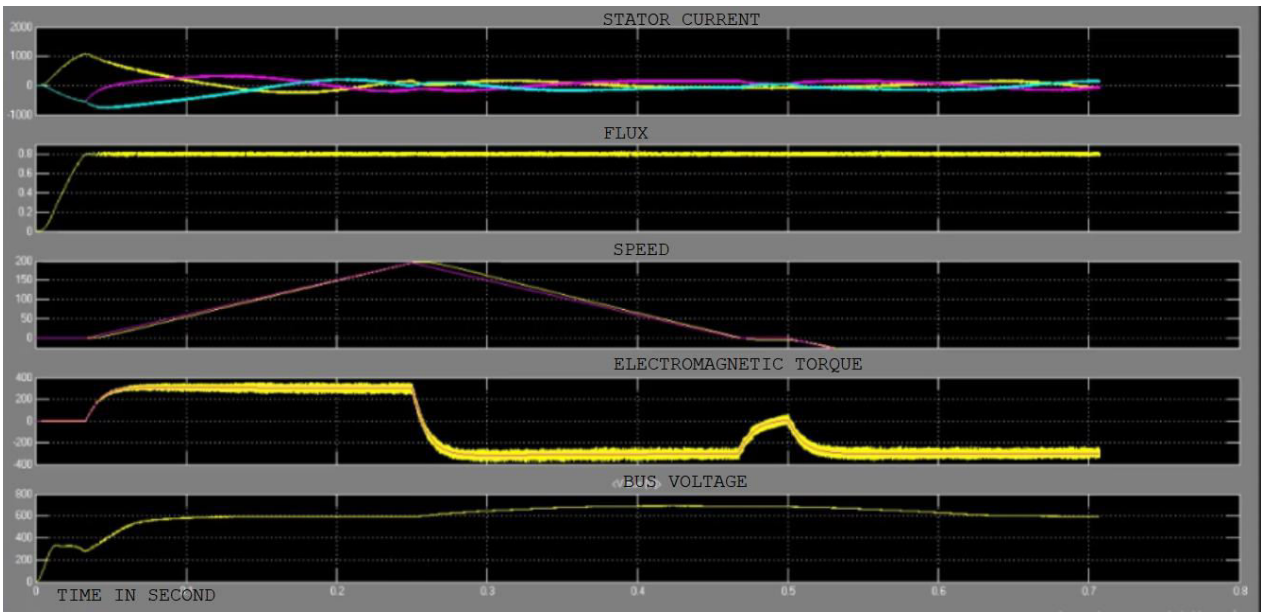

Observe the motor's fast torque response to the torque set point changes. From 0.02 s to 0.25 s, the fan speed increases because of the 600 N.m acceleration torque produced by the induction motor. At t = 0.25 s, the electromagnetic torque jumps down to 0 Name and the speed decreases because of the load torque opposed by the fan. At t = 0.5 s, the motor torque develops a -600 Name torque and allows braking of the fan. During braking mode, power is sent back to the DC bus and the bus voltage increases. As planned, the braking chopper limits the DC bus voltage to 700 V. At t = 0.75 s, the electromagnetic torque jumps back to 0 Name and the speed settles around -10 rpm and decreases toward 0 rpm. Notice that the flux stays around 0.8 Wb throughout the simulation. The flux and torque oscillation amplitudes are slightly higher than 0.02 and 10 Name respectively as specified in the user interface. This is due to the combined effects of the 15 µs DTC controller sampling time, the hysteresis control, and the switching frequency limitation.

The following figure shows the simulation results of the XY scope. The rotating field is clearly visible. Its modulus is about 0.8 and its bandwidth is slightly bigger than 0.2.

VIII. Conclusions

For any IM drives, Direct torque control is one of the cheapest and simple controllers . It allows independent control of motor stator flux and electromagnetic torque. From the analysis it is proved that, this strategy of IM control is simpler to implement than other vector control methods as it does not require pulse width modulator and co-ordinate transformations. But it introduces undesired torque and current ripple. DTC scheme uses stationary d-q reference frame with d-axis aligned with the stator axis. Stator voltage space vector defined in this reference frame control the torque and flux. The main inferences from this work are: 1. In transient state, by selecting the fastest accelerating voltage vector which produces maximum slip frequency, highest torque response can be obtained. 2. In steady state, the torque can be maintained constant with small switching frequency by the torque hysteresis comparator by selecting the accelerating vector and the zero voltage vector alternately. 3. In order to get the optimum efficiency in steady state and the highest torque response in transient state at the same time, the flux level can be automatically adjusted. 4. If the switching frequency is extremely low, the control circuit makes some drift which can be compensated easily to minimize the machine parameter variation. The estimation accuracy of stator flux is very much essential which mostly depends on stator resistance because an error in stator flux estimation will affect the behavior of both torque and flux control loops

torque and current ripple can be minimized by employing space vector modulation technique.

IX.REFERENCES

[1] Thesis NIT Rourkela Page 43

[2] The Mathe Works Inc., Inc.

[3] Garcia, X.T.; Zigmund, B.; Terlizzi, A.; Pavlanin, R.; Salvatore, L. (Mar 2006). "Comparison Between FOC and DTC strategies for Permanent Magnet". Advances in Electrical and Electronic Engineering. 5 (1-2).

[4] Jump up^, M. P.; Franquelo, L.; Rodriguetz, J.; Perez, M.; Leon, J. (Sep 2011). "High Performance Motor Drives". IEEE Industrial Electronics Magazine Sept 2011. Vol. 5 no. 3. pp. 6–26. doi:10.1109/mie.2011.942173.

[5] Jump up^ ., Manfred. "US4678248 Direct Self-Control of the Flux and Rotary Moment of a Rotary-Field Machine".

[6]Jump up^ Depenbrock, Manfred. . Retrieved 13 November 2012.

[7] Jump up^ Noguchi, Toshihiko; Takahashi, Isao (Sep 1984). "Quick Torque Response Control of an Induction Motor Based on a New Concept". IEEJ: 61–70.

[8] Jump up^ Takahashi, Isao; Noguchi, Toshihiko (Sep 1986) (Sep–Oct 1986). "A New Quick-Response and High-Efficiency Control Strategy of an Induction Motor". IA-22 (5) IEEE Trans. on Industry Applications: 820–827. doi:10.1109/tia.1986.4504799. Retrieved 13 November2012.

[9]Jump up^, Gilbert (2010). or less Direct Torque and Flux Control of Interior Permanent Magnet Synchronous Motors at Very Low Speeds Including Standstill. Sydney, Australia: The University of New South Wales.
Jump up^ Er, Uw, (1988). Die Direkte-Selbstregelung (DSR) : e. Verfahren zur hochdynam. Regelung von Drehfeldmaschinen (in German) (Als Ms. gedr. ed.). Düsseldorf: VDI-Verl. ISBN 3-18-143521-X.

[10]Jump up^ Jänecke, M.; Kremer, R.; Steuerwald, G. (9–12 Oct 1989). "Direct Self-Control (DSC), A Novel Method Of Controlling Asynchronous Machines In Traction Applications". Proceedings of the EPE'89. 1: 75–81.

[11]Jump up^ "ACS800 - The New All-compatible Drives Portfolio". Retrieved 14 November 2012.
Jump up^ Lönnberg, M.; Lindgren, P. (2011). "Harmonizing drives - The driving force behind ABB's all-compatible drives architecture" (PDF). ABB Review (2): 63–65.[permanent dead link]

[12]Jump up^ Vas, Peter (1998). Sensor less Vector and Direct Torque Control (Repr. ed.). Oxford [u.a.]: Oxford Univ. Press. ISBN 0198564651.

[13]Jump up^ Tiitinen, P.; Pohjalainen, P.; Lalu, J. (May 1995). "The Next Generation Motor Control Method: Direct Torque Control (DTC)". EPE Journal. 5 (1): 14–18. doi:10.1109/pedes.1996.537279. Retrieved 14 November 2012.
[14]Jump up^ Nash, J.N. (Mar 1997). "Direct Torque Control, Induction Motor Vector Control Without an Encoder". IEEE Trans. on Industry Applications. 33 (2): 333–341. doi:10.1109/28.567792.

[15]Jump up^ Harmoinen, Martti; Manninen, Vesa; Pohjalainen, Pasi; Tiitinen, Pekka (17 Aug 1999). "US5940286 Method for Controlling the Power To Be Transferred Via a Mains Inverter". Retrieved 13 November 2012.

[16]Jump up^ Manninen, V. (19–21 Sep 1995). "Application of Direct Torque Control Modulation to a Line Converter". Proceedings of EPE 95, Sevilla, Spain: 1, 292–1,296.

17]Jump up^ French, C.; Acarnley, P. (1996). "Direct torque control of permanent magnet drives". IEEE Transactions on Industry Applications. 32 (5): 1080–1088. doi:10.1109/28.536869. Retrieved 15 November 2012.

[18]Jump up^ Lendenmann, Heinz; Moghaddam, Reza R.; Tammi, Ari (2011). "Motoring Ahead". ABB Review. Archived from the original on January 7, 2014. Retrieved 7 January 2014.

[19]Jump up^ Gokhale, Kalyan P.; Karraker, Douglas W.; Heikkil, Samuli J. (10 Sep 2002). "US6448735 Controller for a Wound Rotor Slip Ring Induction Machine". Retrieved 14 November 2012.
[20]Jump up^ "DSCM1 - High Performance Machinery Drives" (PDF). Archived from the original(PDF) on October 18, 2011. Retrieved 18 October 2011.

[21]Jump up^ Lascu, C.; Boldea, I.; Blaabjerg, F. (12–15 Oct 1998). "A modified direct torque control (DTC) for induction motor sensorless drive". Proceedings of IEEE IAS 98, St. Louis, MO, USA. 1: 415–422. doi:10.1109/ias.1998.732336.