RESEARCH ARTICLE OPEN ACCESS

Design And Analysis of Cylinder Block using ANSYS

Nirmal Kumar R[1], Udhaya Kumar R[2], Yashic P[3], Purushothaman P[4]
1(Department of Mechanical Engineering, Agni College of Technology, Thalambur
Email:nirmalrajendran99@gmail.com)
2(Department of Mechanical Engineering, Agni College of Technology, Thalambur
Email: udhaya23299@gmail.com)
3(Department of Mechanical Engineering , Agni College of Technology, Thalambur
Email: yashicdon2016@gmail.com)
4(Facultyof Mechanical Engineering, Agni College of Technology, Thalambur
Email: purushothamanp.mec@act.edu.in)

Abstract:

Cylinder block is the important part of Engine. Generally used Cast Iron and Aluminium materials for the fabrication of cylinder block. Here we are finding suitable material for Cylinder block by using ANSYS. Method of analysis are Static Analysis, Transient Thermal Analysis, Fatigue Analysis .These Analysis are taken by ANSYS software. Testing materials are AL7475,NICKEL ALUMINIUM BRONZE ALLOY, GRAPHITE CAST IRON ,SAND CAST MAGNISIUM ALLOY. Finally suitable material for cylinder block is AL7475.

***Keywords* — Cylinder block, engine block, static analysis, transient thermal analysis, fatigue analysis**

I. Introduction:

Cylinder block is the important part of engine. It is also called engine heart because there is having piston movement inside the cylinder. The cylinder block is having number of cylinder. The cylinder block have coolant path. It is made by single material. There is no adding part. Total part of cylinder block is made by one single large material. Other important part also mounted on the cylinder block.

Cylinder block is the 3-4% weight of vehicle. It is made by normally iron and substitute material is aluminium. The application of aluminum engine comes on later period of 1970. During technical requirements substitute materials required.

II. Static Analysis:

The linear is relationship between load and deformation must be linear. The static is load acting depends upon time. Displacements are varying very small range. Stiffness values are must be constant

III. Transient Thermal Analysis:

Transient thermal analyses determine temperatures and other thermal quantities that vary over time. The variation of temperature distribution over time is of interest in many applications such as with cooling of electronic packages or a quenching analysis for heat treatment. Also of interest are the temperature distribution results in thermal stresses that can cause failure. In such cases the temperatures from a transient thermal analysis are used as inputs to a structural analysis for thermal stress evaluations. Many heat transfer

applications such as heat treatment problems, electronic package design, nozzles, engine blocks, pressure vessels, fluid-structure interaction problems, and so on involve transient thermal analyses. A transient thermal analysis can be either linear or nonlinear. Temperature dependent material properties (thermal conductivity, specific heat or density), or temperature dependent convection coefficients or radiation effects can result in nonlinear analyses that require an iterative procedure to achieve accurate solutions. The thermal properties of most materials do vary with temperature, so the analysis usually is nonlinear.

IV. Fatigue Analysis:

Fatigue failure is defined as the tendency of a material to fracture by means of progressive brittle cracking under repeated alternating or cyclic stresses of a intensity considerably below the normal strength.

V. Software:

CATIA:

Cylinder block design is done by CATIA software.

ANSYS:

It is the engineering simulation software. This software founded in 1970. There are many versions comes to market. This software used for simulating computer models of structures, electronics, machine components for analysis. Here we are used version 14.5 for this project. We are used version called ANSYS workbench 14.5. Here we are using analysis on static structural, transient thermal analysis. We are analysis on static, thermal and fatigue. Static analysis and fatigue analysis done by static structural. Thermal analysis based on time varying done by transient thermal.

VI. Methodology

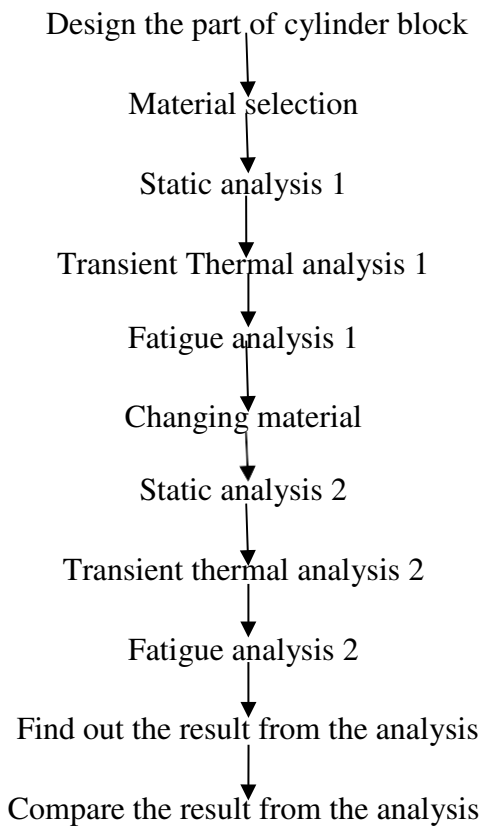

VII. Materials:

There are two type of materials available. The materials are ferrous and non-ferrous. Ferrous materials are having iron content. Non-ferrous materials are having no iron content. Ferrous is having good magnetic property .Ferrous are weight more. Non-ferrous materials are weight less. Ferrous are less expensive. Non-ferrous are more expensive. Ferrous are does not recycling. Non-ferrous are recycling and reusable.

In this analysis taken materials are AL7475,NICKEL BRONZE ALLOY, GRAPHITE CAST IRON, SAND CAST

MAGNISIUM ALLOY. These are material available on various country. These materials are taken into account for analysis process. In this four materials we finding suitable material for future use. Mostly material selections are iron and aluminium for cylinder block. In this analysis we are introduced to new kind of material.

Al7475- it is non- ferrous material. It is weight less. It is available at north America. The cost of this material is 200 per kg.

NICKEL ALUMINIUM BRONZE ALLOY- It is non- ferrous material. It is having high load capacity. The cost of this material is 1200 per kg.

GRAPHITE CAST IRON – It is ferrous material. It is weight more. It is having great strength concentration. The cost of this material is 75 per kg.

In this criteria we taken and move with one material. Our concentration is reduce the weight of the vehicle. The above mention material properties we choose material non- ferrous material. The materials are AL7475 and NICKEL ALUMINIUM BRONZE ALLOY. But here we are taken into account of cost of material. Because reduce the total cost of vehicle. So, we consider the theory of these materials suitable for our analysis is Al7475.

Material Properties:

AL 7475

Density: 2.81g/cc
Young's Modulus: 70.3GPa
Poisson's Ratio: 0.33
Thermal Conductivity: 163 W/m-K
Specific Heat Capacity: 0.88 J/g-°C

Nickel Aluminium Bronze Alloy

Density: 7.53g/cc
Young's Modulus: 110GPa
Poisson's Ratio: 0.32
Thermal Conductivity: 41.9 W/mK
Specific Heat Capacity:419.0 J/kg

Graphite Cast Iron

Density: 7.91g/cc
Young's Modulus: 99GPa
Poisson's Ratio: 0.21
Thermal Conductivity: 46 W/mK
Specific Heat: 490 J/kg

Sand Cast Magnesium Alloy

Density: 1.81g/cc
Young's Modulus: 45GPa
Poisson's Ratio: 0.35
Thermal Conductivity: 62 W/m.K
Composition:
Aluminium 10.7%
Magnesium 90%
Zinc 0.3%

VIII. DESIGN/IMPLEMENTATION:

Here we designed V8 Engine for analysis. This design is taken and made by CATIA Software. This is the base of this project. The design made by calculation and assumption of basic information of the engine. After finishing design of cylinder block we move to ANSYS Workbench for making analysis. Static analysis Load applied near 11.6 Mpa Pressure applied each cylinder of engine block. Bottom of the cylinder block fixed. Result of this analysis like stress, strain, total deformation. There is cylinder block divided into two models. One is half model. Another one is full model. In half model only four are cylinder considerable for analysis. In full model total

block is considerable for analysis. The second analysis is Transient thermal Analysis. In this analysis 250 sec time was taken. In that time taken applied temperature near 800 degree centigrade. The result of this analysis is stress, strain, temperature, heat flux. The final analysis are known Fatigue Analysis. This is only refer for safety factor.

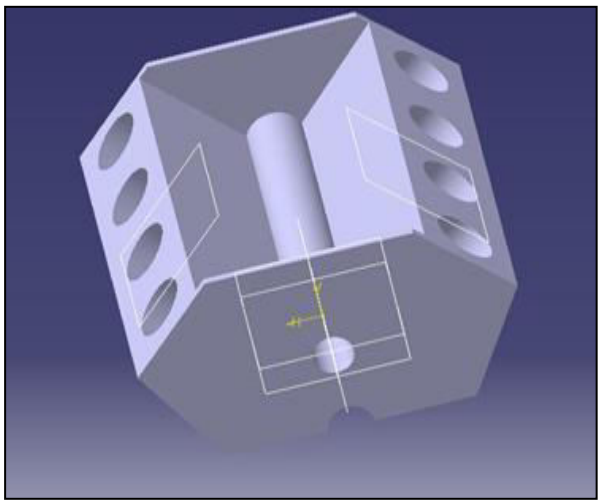

Fig .No. 1 Design of cylinder Block

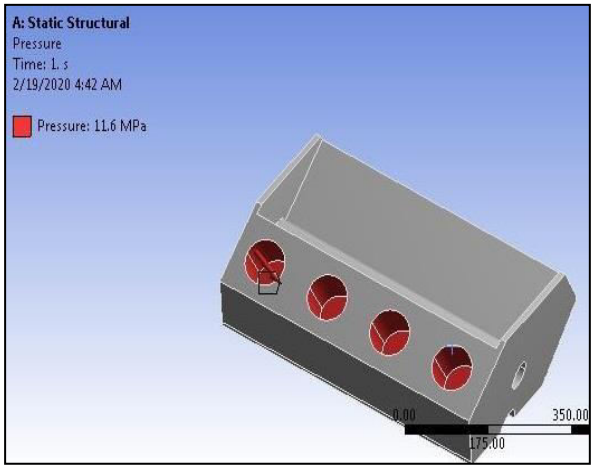

Fig .No. 2 Pressure Applied on Cylinder

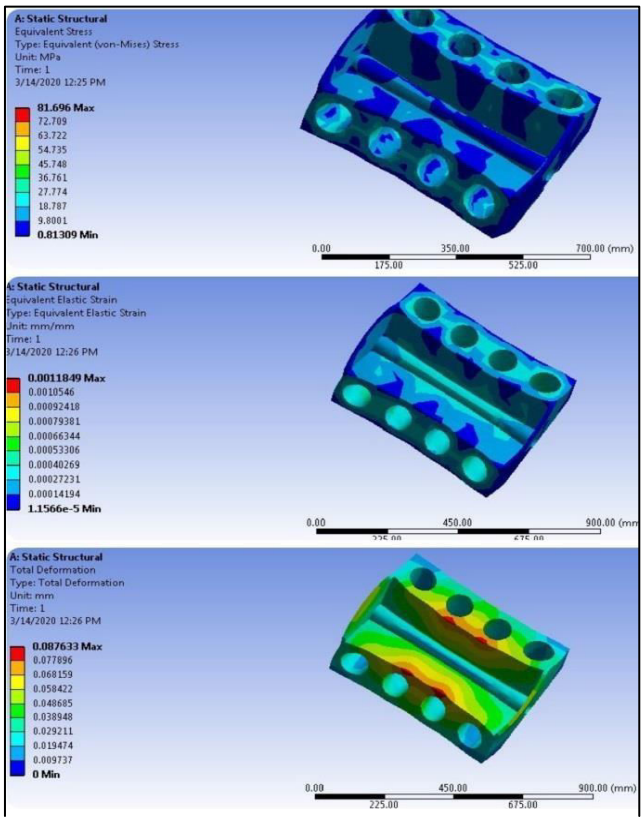

Fig .No.3 Static Analysis

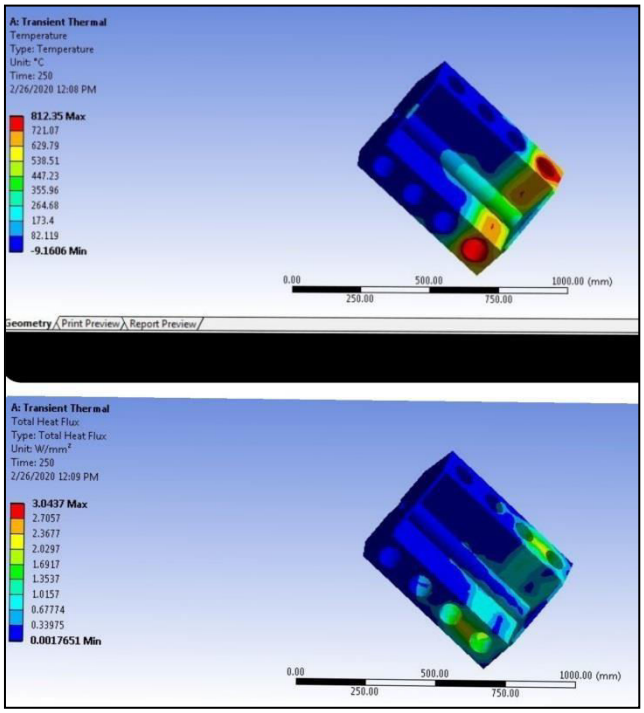

Fig .No. 4 Transient thermal Analysis

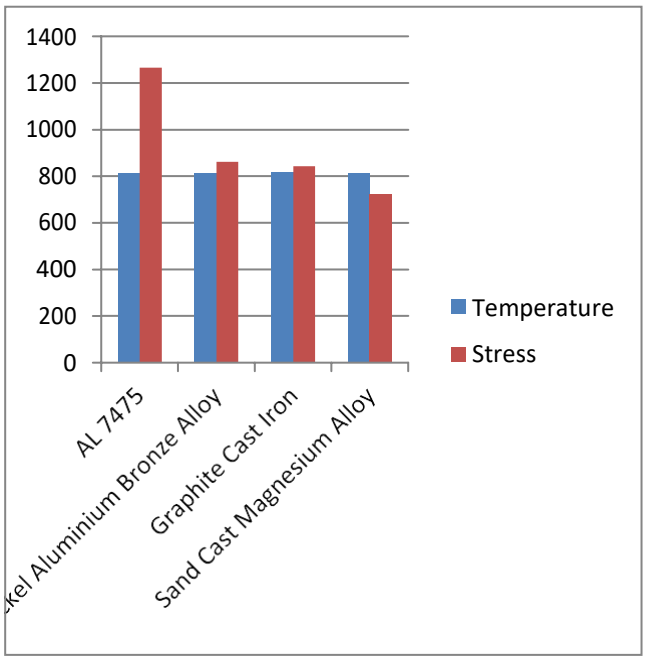

Fig .No.5Transient Thermal Temperature and stress comparative chart

1 .Static Structural

Table No I Static Structural Half Model

Type of material	Equivalent Stress Mpa	Equivalent Strain	Total Deformation mm
Al 7475	84.63 to 0.09815	0.0012259 to 2.9995e-6	o.13318
Nickel Aluminum Bronze Alloy	84.988 to 0.096204	0.00078642 to 1.9022e-6	0.08493
Graphite Cast Iron	88.523 to 0.095407	0.00090908 to 1.974e-6	0.091051
Sand Cast Magnesium Alloy	83.806 to 0.10285	0.00019008 to 4.7653e-6	0.20879

Here above the table is result of static structural analysis of Half model. In this Analysis highest stress material is Graphite cast iron. Minimum strain value contain material is Sand Cast Magnesium Alloy .Minimum Deformation material is Nickel Aluminium Bronze alloy

2. Static Structural

Table No II Static Structural Full Model

Type of material	Equivalent Stress Mpa	Equivalent Strain	Total Deformation mm
Al 7475	81.994 to 0.81309	0.0011849 to 1.1566e-5	0.087633
Nickel Aluminum Bronze Alloy	82.168 to 0.813	0.0007612 to 7.3951e-6	0.0561
Graphite Cast Iron	86.751 to 0.84328	0.00809089 to 8.518e-6	0.062426
Sand Cast Magnesium Alloy	81.32 to 0.1426	0.0018316 to 1.8095e-5	0.13597

Here above the table is result of static structural analysis of Full model. In this Analysis highest stress material is Graphite cast iron. Minimum strain value contain material is Nickel Aluminium Bronze Alloy.Minimum Deformation material is Nickel Aluminium Bronze alloy

3. Transient Thermal

Table No III Transient Thermal

Types Of Materials	Temperature	Heat Flux
Al 7475	812.35 t0 - 9.1606	3.0437 to 0.0017651
Nickel Aluminum Bronze Alloy	816.45 to - 15.679	1.3856 to 0.0005823 4
Graphite Cast Iron	814.29 to - 16.28	1.4996 to 0.0008038
Sand Cast Magnesium Alloy	811.57 to - 9.0526	1.177 to 0.0007251 9

Here Above table highest temperature conduct material is Nickel aluminum Bronze alloy.

IX. CONCUSION

From this paper we are conclude that design of cylinder block materials are Al7475 and Graphite cast iron. Here Al 7475 stress and temperature values suitable for engine environment.

REFERENCES:

[1] Alten, H., Illen, M., Schmitz, G., Thermodynamische Unter suchungeines 4 Taktmotors mitnac hexpansion, Ilmor Engineering Report TD-103, 1999.

[2] Basshuysen, R. van, Schaefer, F., Internal Combustion Engine. Handbook, Basics,Components, Systems and Perspectives, SAE International, Warrendale 2004.

[3] Fröhn, U., et. al, Boost to the Max, Turbo News 01/2011, BorgWarner Turbo SystemsWorldwide Headquarters GmbH, Kirchheimbolanden 2011.

[4] Postrzednik, S., mudka, Z., Termodynamiczneorazekologiczneuw arunkowaniaeksploatacjitokowychsiln ikówspalinowych, Wydawnic two Politechnikiskiej, Gliwice 2007.