PESTICIDE DETECTION DEVICE USING IOT

Siva priya.A, Varshini.S, Dr.V.Kalaivani M.E,Ph.D (Prof.)
Computer Science and Engineering, National Engineering College-Kovilpatti
628 503

Abstract- *The uses of pesticides, steroids and fertilizers has to be tremendously increasing the negative effects caused to the people in terms of health. The inappropriate or overuse of pesticides can lead to dangerous health problems and causes Alzheimer's disease and many other diseases. Harmful pesticides enter into the human body through fruits and vegetables, so that optimal solution is needed to analyse the disease and the pesticides detected in the fruits the common man is consuming.*

Keywords- DHT 11 Sensor(Temperature and humidity sensor), MQ 7 (gas sensor), Node MCU,ESP8266 wifi module, Arduino, IoT web server.

I. INTRODUCTION

With the gradual advance of urban construction, the product of vegetables and fruits are most in the supermarkets.Gas chromatography (GC), liquid chromatography (LC) or combinations (GC-MS or LC-MS/MS) are the traditional analytical techniques for the identification and quantity identification of pesticides residues detection. These methods are slow, high cost, laborious and not convenient to popular and promote. Moreover, they do not have the ability of information sharing and the remote control. Therefore, they are not suitable for the rapid detection and agricultural (farming) products**.**
Biosensors account for an easy method to determine pesticides in environmental and food matrices. The use of biosensors as screening devices is cost effective and decreases the number of samples to be analyzed by traditional analytical techniques mentioned above. With the explosive growth of smart phones, wireless technologies and sensor technologies have become a fundamental tool for everyday life around the world. The coming wave of interconnected devices, appliances, sensors, meters and countless other “things” represents the next generation of a hyperconnected world, the IoT. Interconnected entities can open a communication channel with each other based on the IoT.

Many technologies serve as the building blocks of this new paradigm, such as QR barcode, cloud services, machine-tomachine interfaces (M2M), and so on. Also, this application domains .
The IoT we used in this pesticide residues detection system based on the pesticides detection .
Due to the above, the purpose of this investigation is to design a system for pesticide residues detection and agricultural products traceability. We intend to allow anyone to interconnect this system with programming knowledge. This system can be used in supermarkets, markets and plantations. Moreover, this system also can be used in the areas of purchasing, storage and transportation , and in house.

II. IDENTIFY, RESEARCH AND COLLECT IDEA

1. Pesticides impact on humans

Pesticides are substance or mixture of substance which differ in their Physical, chemical and identical properties from one to other. Hence, they are classified based in these properties. Some pesticides are also categorized into various classes depending on the needs. Presently, three most popular classifications of pesticides which are widely used in classification based on the mode of entry, pesticide function and pest organism they kill, the chemical composition of the pesticide. Based on toxicity of pesticides, WHO classified them into four classes: extremely dangerous, highly dangerous, moderately dangerous and slightly dangerous. Improper application of pesticides can cause severe harmful effect to living system and the environment. Most pesticides do not distinguish between pests and other similar incidental life form and kill them all. The toxicity of insecticides to an organism is usually expressed in terms of the LD50 (lethal dose 50 percent) and LC50 (50 percent lethal concentration).

2. Types of Pesticides

There are many different types of pesticides, each is meant to be effective against specific pests. The term **"-cide**" comes from the Latin word "**to kill**."

Algaecides are used for killing and/or slowing the growth of algae.

Antimicrobials control germs and microbes such as bacteria and viruses.

Biopesticides are made of living things, come from living things, or they are found in nature.

Desiccants are used to dry up living plant tissues.

Defoliants cause plants to drop their leaves.

Disinfectants control germs and microbes such as bacteria and viruses.

Fungicides are used to control fungal problems like molds, mildew, and rust.

Herbicides kill or inhibit the growth of unwanted plants, aka weeds.

Illegal and Counterfeit Pesticides are imported or sold illegally.

Insecticides are used to control insects.

Insect Growth Regulators disrupt the growth and reproduction of insects.

Minimum Risk Pesticides are exempt from EPA registration, but many states require them to be register.

Miticides control mites that feed on plants and animals. Mites are not insects, exactly.

3. Existing System

The traditional methods are the laboratory methods like several types of chromatography techniques such as Gas chromatography, liquid chromatography or combination of the above two. These methods are time demanding, laborious, need expensive equipments and highly skilled technicians. Although these methods are quantitative analysis with selectivity, they are slow, high cost, laborious and not convenient to popular and promote. Moreover, they do not have the ability of information sharing and the remote control. Therefore, they are not suitable for the rapid detection and agricultural (farming) products.

III. PROPOSED SYSTEM

Hardware system architecture consists of the IOT part where the three different sensors (Gas, Moisture, Temperature) are used to sense the presence of pesticides in the fruits that are available from the market. Then the sensed values are send to the micro controller;

Node MCU Esp8266 WiFi module is used as the controller in our project. Once the controller gets this data, it is sent to Iot web server. A database is created in web server to which the controller updates the values through the module.

IR Sensor:

- IR sensors have two parts: a light emitting diode (LED) and a receiver. When an object comes close to the sensor, the infrared light from the LED reflects off of the object and is detected by the receiver.

DHT 11 Sensor:

- The DHT11 is a commonly used Temperature and humidity sensor for prototypes monitoring the ambient temperature and humidity of a given area.

Gas sensor(MQ sensor):

- They are used to detect a wide variety of gases like alcohol, smoke, methane, LPG, hydrogen, NH3, Benzene, Propane etc.

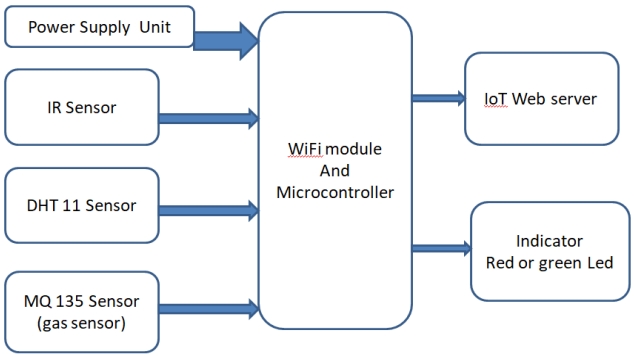

Fig.1, Block diagram for proposed system

IV. HARDWARE AND SOFTWARE DESCRIPTION

Here comes the most crucial step for your research publication. Ensure the drafted journal is critically reviewed by your peers or any subject matter experts. Always try to get maximum review comments even if you are well confident about your paper.

1. **Programming nodemcu esp8266 with arduino IDE**

The NodeMCU Development Board is very easily programmed with Arduino IDE and it is easy to use. Programming NodeMCU with the Arduino IDE will take time in between 5-10 minutes. If you need this Arduino IDE, use a USB cable and NodeMCU board. We can check this Getting Started Tutorial for NodeMCU to prepare our Arduino IDE for NodeMCU.

2. **Uploading your first program**

Once Arduino IDE is installed on the desktop, connect the board to the computer using the USB cable. Now open the Arduino IDE and choose the correct board by selecting the steps wise methods of Tools>Boards>NodeMCU1.0 (ESP12E Module), and choose the correct Port by selecting Tools>Port. Then we get it started with the NodeMCU board and built-in LED and the example code by the selecting of Files>Examples>Basics>Blink. Once code is filled into your IDE, click the 'upload' button gives in the top bar. Once the upload is finished, we should see the built-in LED of the board blinking or glowing.

V. EXPERIMENTAL SETUP

RESULT ANALYSIS:

This system is implemented by the combination of hardware components. All the hardware components are assembled in the implementation phase. The experimental setup diagram of the developed system is demonstrated below from Figure 2.

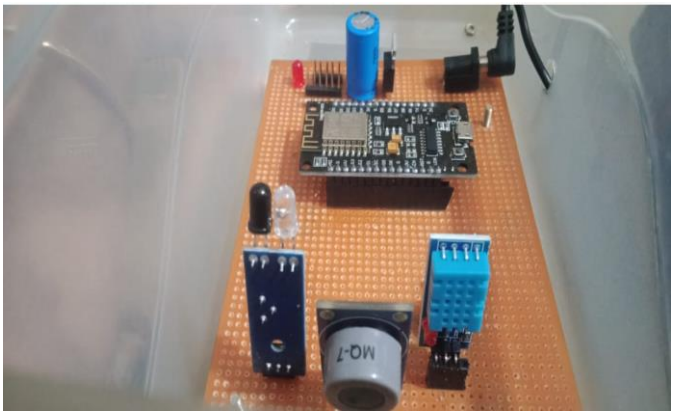

Fig.2, Experimental Setup

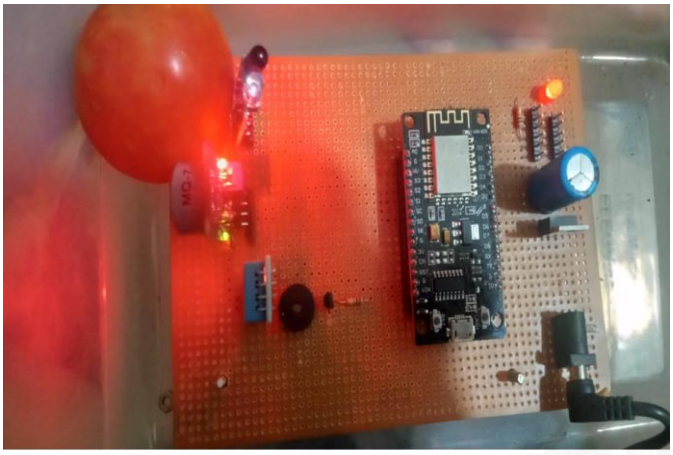

Fig.3, Testing Sample

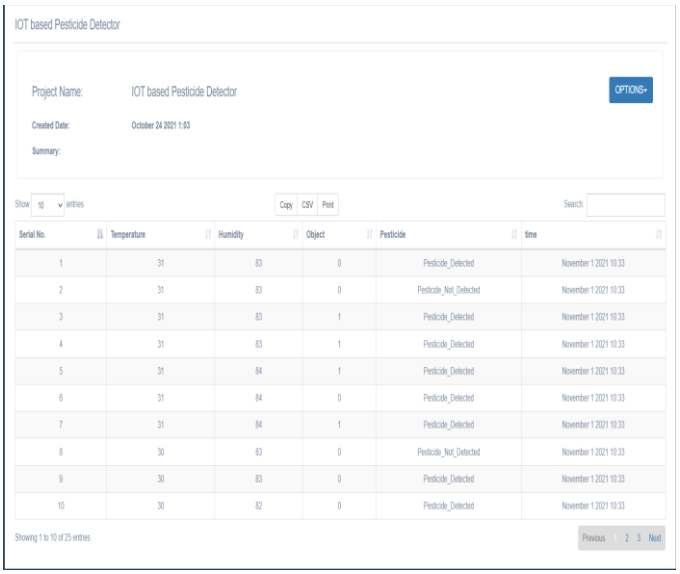

IOT based Pesticide Detector

Project Name: IOT based Pesticide Detector

OPTIONS

Created Date: October 24 2021 1:03

Summary:

Show 10 entries Copy CSV Print Search:

Serial No.	Temperature	Humidity	Object	Pesticide	time
1	31	83	0	Pesticide_Detected	November 1 2021 10:33
2	31	83	0	Pesticide_Not_Detected	November 1 2021 10:33
3	31	83	1	Pesticide_Detected	November 1 2021 10:33
4	31	83	1	Pesticide_Detected	November 1 2021 10:33
5	31	84	1	Pesticide_Detected	November 1 2021 10:33
6	31	84	0	Pesticide_Detected	November 1 2021 10:33
7	31	84	1	Pesticide_Detected	November 1 2021 10:33
8	30	83	0	Pesticide_Not_Detected	November 1 2021 10:33
9	30	83	0	Pesticide_Detected	November 1 2021 10:33
10	30	82	0	Pesticide_Detected	November 1 2021 10:33

Showing 1 to 10 of 25 entries Previous 1 2 3 Next

Fig.4, Testing sample data collected

VI. CONCLUSION

Finally, we conclude that by using IoT-based monitoring, pesticides in fruits and vegetables. Detection of the pests present in fruits and vegetables or any residues present through the pest detection sensor like gas and ph sensor senses and passes the information to the Arduino and then displays it on a Web page. By detecting through the process, it informs how much residues of pest chemicals are present so that fruits and vegetables can be washed more than twice until it reaches 0.01%. The application of these pesticides residues detection device has been performed on actual samples. The proposed system showed to be successful in pesticide residue detection and agricultural products traceability. For chlorpyrifos extracts, the detection system based on biosensor permitted to determine concentrations of 2μg/L, thus indicating the system's performance can satisfy the pesticide residues detection and information sharing requirement of natural vegetables and fruits samples. The detection system based on P.H. Sensors and IoT for pesticide residues detection can be used in every link in the agricultural product's traceability.

ADVANTAGES

1) Does not depend on Temperature.
2) Can be used by anyone.
3) Simple to use.
4) Very effective usage.
5) Reducement of causing diseases.

REFERENCES

[1] A. J. Dhembare, "Bitter truth about fruit with reference to artificial ripener," Archives of Applied Science Research, vol. 5, no. 5, pp. 45-54, 2013.

[2] tahir, Salma Iqbal Naik, Salma Rehman and M. Shahzad, "A quantitative analysis for the toxic pesticide residues in marketed fruits and vegetables in lahore, pakistan," Biomedica., vol. 25, pp. 171 – 174, Dec. 2009.

[3] M. Usman Dorria M. Ahmed, Aml R.M Yousef and H S.A. Hassan, "Relationship between electrical conductivity, softening and color of Fuerte avocado fruits during ripening ," Agric. Biol. J. N. Am., vol. 1, no. 5, pp. 878-885, 2010.

[4] Virgínia C. Fernandes, Valentina F. Domingues, Nuno Mateus, and Cristina Delerue-Matos, "Determination of Pesticides in Fruit and Fruit Juices by Chromatographic Methods. An Overview," Journal of Chromatographic Science, vol. 1, no. 49, pp. 715-730, 2011.

[5] International Code of Conduct on the Distribution and Use of Pesticides, Hundred and Twenty-Third Session of the FAO Council, November 2002.

[6] Pin Zhang, Xiaojun Hu, Ying Wang and Tieheng Sun, "Simultaneous Determination of 15 Organochlorine Pesticide Residues in Soil by GC/MS/MS," in Proc.2nd International Conference on Bioinformatics and Biomedical Engineering, pp.4113-4116, May 2008.

[7] Tian Newman, Fabien Josse, Arnold Mensah Brown and Florian Bender "Analysis of the detection of organophosphate pesticides in aqueous solutions using polymer-coated SH-SAW sensor arrays," in Proc. European Frequency and Time Forum & International Frequency Control Symposium (EFTF/IFC) Joint, pp.620-623, July 2013.

[8] Jeffry Kirsch, Virginia A. Davis, and Aleksandr L. Simonian, "Direct and discriminative detection of organophosphate neurotoxins for food and agriculture products," IEEE Sensors, pp.1-4, Oct. 2012.

[9] Yi Chen, Rui Wang and Hongqian Chen, "A non-standard-substance pesticide residue qualitative analysis method based on SVM," in Proc. IEEE International Conference on Cloud Computing and Intelligence Systems (CCIS), pp.89-93, Sept. 2011.

[10] Correia-Sá, Luísa "Optimization of QuEChERS method for the analysis of organochlorine pesticides in soils with diverse organic matter." 2012 Journal of separation science, page no. 1521-1530

[11] Rodrigues, Dasciana2011 Determination of insecticide residue in Chromatography Research International